19

Linear Drive


GMT GLOBAL INC.

No. 3, Lane 34, Minju Street, Shioushuei Township, Changhua 50442, Taiwan.
TEL：+886-4-768-8320
FAX：+886-4-768-8314
E-mail：sales@gmtlinear.com

Europe Branch
GMT Europe GmbH
Wilhelm-Busch-Str. 4, 26655 Westerstede.
TEL：04488-520-30-47
E-mail：info@gmteurope.de


www.gmtlinear.com


2016.09.20

AC Design 04-27071159




# Linear Drive

GMT GLOBAL INC.

INDEX


**Cautions**

Product Safety Information P.2~P.7

**Product Introduction**

Inner Structure-Ball Screw Driven P.8~P.9

Inner Structure-Belt Driven P.10~P.11

**GETH Specifications Introduction**

Model No. Introduction P.12~P.13

Quick Selection P.14~P.15



**GETH5M Series** 低價格 輕荷重
【Small Type】TYPE
Width 51 mm
Maximum Stroke 800 mm
Maximum Load 10 kg P.16~P.23



**GETH6M Series** 低價格 輕荷重
【Small Type】TYPE
Width 65 mm
Maximum Stroke 800 mm
Maximum Load 30 kg P.24~P.31



**GETH10 Series**
【Standard Type】TYPE
Width 102 mm
Maximum Stroke 1050 mm
Maximum Load 50 kg P.31~P.37



**GETH12 Series**
【Standard Type】TYPE
Width 102 mm
Maximum Stroke 1050 mm
Maximum Load 50 kg P.38~P.43



**GETH13 Series** 低價格 中荷重
【Standard Type】TYPE
Width 135 mm
Maximum Stroke 1050 mm
Maximum Load 70 kg P.44~P.49



**GETH14 Series**
【Standard Type】TYPE
Width 135 mm
Maximum Stroke 1050 mm
Maximum Load 110 kg P.50~P.61



**GETH17 Series** 高荷重
【Large Type】TYPE
Width 170 mm
Maximum Stroke 1250 mm
Maximum Load 120 kg P.62~P.71

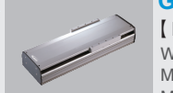

**GETH22 Series** 高荷重
【Large Type】TYPE
Width 220 mm
Maximum Stroke 1500 mm
Maximum Load 150 kg P.72~P.77

**GETB Specifications Introduction**

Model No. Introduction P.78~P.79

Quick Selection P.80~P.81



**GETB5 Series** 低價格 輕荷重
【Small Type】TYPE
Width 50 mm
Maximum Stroke 800 mm
Maximum Load 10 kg P.82~P.89

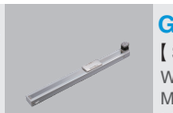

**GETB6 Series** 輕荷重
【Small Type】TYPE
Width 65 mm
Maximum Stroke 800 mm
Maximum Load 15 kg P.90~P.97



**GETB10 Series**
【Standard Type】TYPE
Width 102 mm
Maximum Stroke 2550 mm
Maximum Load 10 kg P.98~P.103



**GETB14M Series**
【Standard Type】TYPE
Width 135 mm
Maximum Stroke 3050 mm
Maximum Load 25 kg P.104~P.109



**GETB17M Series** 長行程
【Large Type】TYPE
Width 170 mm
Maximum Stroke 4050 mm
Maximum Load 45 kg P.110~P.115



**GETB22M Series**
【Large Type】TYPE
Width 220 mm
Maximum Stroke 4050 mm
Maximum Load 85 kg P.116~P.121

**Technical Information**

Inspection Method P.122~P.123

Loading Calculation P.124~P.125

Accuracy Definition P.126~P.127

Servo Motor Specifications P.128~P.135

Application P.136~P.143

Inquiry Form P.144~P.145

# GMT Product Safety Information

To ensure correct and safe of GMT industrial robots, carefully read this manual make yourself well acquainted with the contents, FOLLOW THE WARNINGS, CAUTIONS AND INSTRUCTIONS INCLUDED IN THIS MANUAL. Warning information in this manual is shown classified into the following items.

## Safety Records

Industrial robots are highly mechanical devices that provide a large degree of freedom when performing various manipulative tasks. Failure to take necessary safety measures or mishandling due to not following the instructions in this manual in trouble or damage to the robot and injury to personnel (robot operator or service personnel) including fatal accidents.

Failure to follow DANGER instructions will result in severe injury or death to the robot operator, bystanders or persons inspecting or repairing the robot .
Failure to follow WARNING instructions could result in severe injury or death to the robot operator, bystanders or persons inspecting or repairing the robot.
Failure to follow CAUTION instructions may result in injury to the robot operator, bystanders or persons inspecting or repairing the robot, or damage to the robot and or robot controller.

Key points of sequence of operations of the product :
NOTE
It is not possible to list all safety items in detail within the limited space of this manual.
So it is essential that the user have a full knowledge of basic safety rules and also that the operator makes correct judgments on safety procedures during operation.
This manual and warning labels supplied with or affixed to the robot are written in English.
If the robot operator or service personnel does not understand English , do not permit that person to handle the robot.

## Particularly Important Considerations

Essential Caution Items
Particularly important cautions for handling or operating the robot are described below. In addition, safety information about installation, operation, inspection and maintenance is provided in each chapter.
Be sure to comply with these instructions to ensure safe use of the robot.

Observe the following cautions during automatic operation

- Install a safeguard (protective enclosure) to keep any person from entering within the movement range of the robot and suffering injury due to being struck by moving parts.
- Install a safety interlock that triggers emergency stop when the door or panels is opened.
- Install safeguards so that no one can enter inside except from doors or panels equipped with safety interlocks.

→ DANGER：Serious injury or death will result from impact with moving robot.

- Keep outside of guard during operation.
- Lock out power before approaching robot.







Use caution to prevent hands or fingers from being pinched or crushed.

→ WARNING：**The hands or fingers injury will result from moving robot.**

- Moving parts can pinch or crush.
- Keep hands away from robot arms.

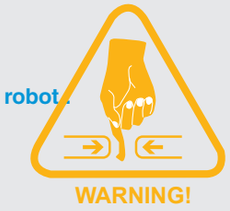








## Particularly Important Notices

Follow the instructions on listed on warning labels and in this manual：

- Be sure to read the warning labels and this manual carefully and make sure you thoroughly understand their contents before attempting installation and operation of the robot.
- Before starting robot operation, be sure to reread the procedures and cautions relating to your work as well as descriptions in this chapter (Product Safety Information).
- Never install, adjust, inspect or service the robot in any manner that does not comply with the instructions in this manual.

→ **WARNING：The hands or fingers injury will result from moving robot.**

- Improper installation or operation can result in serious injury or death.
- Read the owner's manual and all warning labels before operation.

Do not use the robot in environments containing inflammable gas, etc.

- This robot was not designed for operation in environments containing where inflammable or explosive substances are present.
- Do not use the robot in environments containing inflammable gas, dust or liquids. Explosions or fire might otherwise result.

Do not use the robot in locations possibly subject to electromagnetic interference, etc.

→ WARNING：Avoid using the robot in locations subject to electromagnetic interference, electrostatic discharge or radio frequency interference. Malfunctions might otherwise occur.

Use caution when releasing the brake of a vertical use robot.

→ **WARNING**：The vertical axis will slide down when the brake is released, causing a hazardous situation.

- Press the emergency stop button and prop up the vertical axis with a support stand before releasing the brake.
- Be careful not to let your body get caught between the vertical axis and installation base when releasing the brake to perform direct teaching.

Provide safety measures for end effector (gripper, etc).

→ WARNING：

- End effectors must be designed and manufactured so that they create no hazards (for example, a workpiece that comes loose) even if power (electricity, air pressure, etc.) is shut off or power fluctuations occur.
- If there is a possible danger that the object gripped by the end effector may fly off or drop, then provide appropriate safety protection taking into account the object size, weight, temperature and chemical properties.

Use caution when removing the motor. (Vertical use robots)

→ WARNING ：The vertical axis will slide down when the motor is released, causing a hazardous situation.

- Turn off the robot controller and prop up the vertical axis with a support stand before removing the motor.
- Be careful not to let your body get caught between the vertical axis parts and installation base.

Take the following safety precautions during inspection of controller.

→ **WARNING：The vertical axis will slide down when the motor is released.**

- When you need to touch the terminals or connectors on the outside of the controller during inspection, always first turn off the controller power switch and also the power source in order to prevent possible electrical shock.
- Never touch any internal parts of the controller.

Consult us for corrective action when the robot is damaged or malfunctions occur.

→ WARNING：If any part of the robot is damaged or any malfunction occurs, continuing the operation may be very dangerous.
Please consult your GMT sales office or dealer for corrective action.

## Particularly Important Considerations

Be careful not to touch the motor or speed reduction gear casing when hot.

→ WARNING：

- The motor and speed reduction gear casing are extremely hot after automatic operation, so burns may occur if these are touched.
- Before handling the parts during inspection or servicing, turn off the controller, wait for a while and check that the part has cooled.

Do not remove, alter or stain the warning labels.

→ WARNING：

- Do not remove, alter or stain the warning labels on the robot.
- Do not allow the warning labels to be hidden by devices installed onto the robot by the user.
- Provide proper lighting so that the symbols and instructions on the warning labels can be clearly seen even from outside the safeguard enclosure.

→ WARNING：Be sure to ground the robot and controller to prevent electrical.

Protective bonding

Be sure to make correct parameter settings.

→ WARNING：

- The robot must be operated with the correct tolerable moment of inertia and acceleration coefficients according to the manipulator tip mass and moment of inertia.
- If these are not correct, drive unit service life may end prematurely, and damage to robot parts or residual vibration during positioning may result.

## Safety Functions

Overload detection：

This function detects an overload applied to the motor and shuts off the servo power.

Sensor：

Soft limits

- Soft limits can be set on each axis to limit the working envelope in manual operation after return-to-origin and during automatic operation.

  Note:The working envelope is the area limited by soft limits.

Mechanical stoppers：

If the servo power is suddenly shut off during high-speed operation by emergency stop or safety functions, these mechanical stoppers prevent the axis from exceeding the movement range. No mechanical stopper is provided on the rotating axis.

Note:The movement range is the area limited by mechanical stoppers.

→ WARNING：Axis movement will not stop immediately after the servo power supply is shut off by emergency stop or other safety functions.

Vertical axis brake：

An electromagnetic brake is installed on the vertical use robot to prevent the vertical axis from sliding down when servo power is turned off. This brake is wrong when the controller is off or the vertical axis servo power is off even when the controller is on.

The vertical axis brake can be released by means of the programming unit or by a command in the program when the controller is on.

→ WARNING：The vertical axis will slide down when the brake is released, creating a hazardous situation.

- Press the emergency stop button and prop the vertical axis with a support stand before releasing the brake .
- Use caution not to let your body get caught between the vertical axis and installation base when releasing the brake to perform direct teach.



## Safety Measures for the System

Since the robot is commonly used in conjunction with an automated system, dangerous situations are more likely to occur from the automated system than from the robot itself.

Accordingly, appropriate safety measures must be taken on the part of the system manufacturer according to the individual system. The system manufacturer should provide instruction manual for safe, correct operation and servicing of the system.

## Trial Operation

(1) If a safeguard enclosure has not yet been provided right after installation of the robot, rope off or chain off around the movement area of the manipulator in place of safeguard, and observe the following points.

1. Use sturdy, stable posts which will not fall over easily.
2. The rope or chain should be easily visible by everyone around the robot.
3. Place a sign to keep the operator or other personnel from entering the movement range of the manipulator.

(2) Check the following points before turning on the controller.

1. Is the robot securely and correctly installed?
2. Are the electrical connections to the robot correct?
3. Are items such as air pressure correctly supplied?
4. Is the robot correctly connected to peripheral equipment?
5. Have safety measures (safeguard enclosure, etc.) been taken?
6. Does the installation environment meet the specified standards.

(3) After the controller is turned on, check the following points from outside the safeguard enclosure.

1. Does the robot start and stop as intended? Can the operation mode be selected correctly?
2. Does each axis move as intended within the soft limits?
3. Does the end effector move as intended?
4. Are the signal transmissions to the end effector and peripheral equipment correct?
5. Does emergency stop work?
6. Are the teaching and playback functions normal?
7. Are the safeguard enclosure and interlock working as intended?
8. Does the robot move correctly during automatic operation?

## Work Within the Safeguard Enclosure

(1) Work Within the Safeguard Enclosure

Work within the safeguard enclosure

When work is required inside the safeguard enclosure, always turn off the controller and place a sign indicating that the robot is being adjusted or serviced in order to keep any other person from touching the controller switch or operation panel, except for the following cases.

1.Soft limit settings

2.Teaching

For item 1 , follow the precautions and procedure for each section.

To perform item 2 , refer to the description in 2 below.

(2) Teaching

When performing teaching within the safeguard enclosure, comply with the instructions listed below.

Check or perform the following points from outside the safeguard enclosure.

1.Make sure that no hazards are present within the safeguard enclosure by a visual check.

2.Check that the programming unit MPB or DPB operates correctly.

3.Check that no failures are found in the robot.

4.Check that emergency stop works correctly.

5.Select teaching mode and prohibit automatic operation.

## Automatic Operation

(1) Automatic operation described here includes all operations in AUTO mode.

Check the following before starting automatic operation：

1.No one is within the safeguard enclosure.

2.The programming unit and tools are in their specified locations.

3.The alarm or error lamps on the robot and peripheral equipment do not flash.

4.The safeguard enclosure is securely installed with safety interlocks actuated.

(2) Observe the following during automatic operation or in cases where an error occurs.

1.After automatic operation has started, check the operation status and warning lamp to ensure that the robot is in automatic operation.

2.Never enter the safeguard enclosure during automatic operation.

3.If an error occurs in the robot or peripheral equipment, observe the following procedure before entering the safeguard enclosure.

1.Press the emergency stop button to set the robot to emergency stop.

2.Place a sign on the start switch, indicating that the robot is being inspected in order to keep any other person from touching the start switch and restarting the robot.

## Adjustment & Inspection

Do not attempt any installation, inspection or maintenance unless it is described in this manual.



GMT GLOBAL INC.
Motorized X-Axis ▶ Ball Screw&Belt Driven ▶ Linear Drive
Cautions

## Repair & Modification

Do not attempt any repair, parts replacement and modification unless described in this manual. These works require technical knowledge and skill, and may also involve work hazards.

## Warranty Period

**The warranty is effective of a period of:**

- 18 months (one and a half years) after shipment from Taiwan factory, or
- One year after installation or 2500 hours of actual operation whichever comes first.

## Exceptions to the Warranty

This warranty will not apply in the following cases:

- Fatigue arising due to the passage of time, natural wear and tear occurring during operation (natural fading of painted or plated surfaces, deterioration of parts subject to wear)
- Minor natural phenomena which do not effect the capabilities of robot (noise from computers, motors,etc.).
- Damage due to earthquakes, storms, floods, thunderbolt, fire or any other natural or man-made calamities.
- Troubles caused by procedures prohibited in this manual.
- Modifications to the robot not approved by GMT or GMT sales representatives.
- Use of any other than genuine parts and specified lubricant and grease.
- Insufficient or errors in maintenance and inspection.
- Repairs by other than authorized dealers.

In addition, we are response for the failure of our own goods repair, but are not responsible for other losses caused due to the product damage.

## Service Coverage

We provide customers with the following services :

- Guide to installation and trial operation.
- Guide to maintenance.
- Guide to wiring technical operation and training.
- Guide to technical programming.

## Various Slide Options

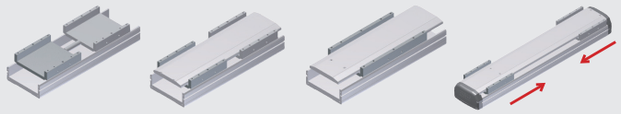

Double Slider (Uniform Motion) | Double Slider (Single Motion) | Extended Slider | Uniform Motion In Opposite Direction

## Patent Grease Fitting Design (Optional)

This patent grease fitting only needs to feed lubricants from the side of slider, and the rest of parts will be refueled automatically. Easy maintenance and time saving. ( Mounting directions are available upon customer request.)

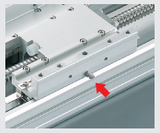

Patent grease fitting design
Copyright ©

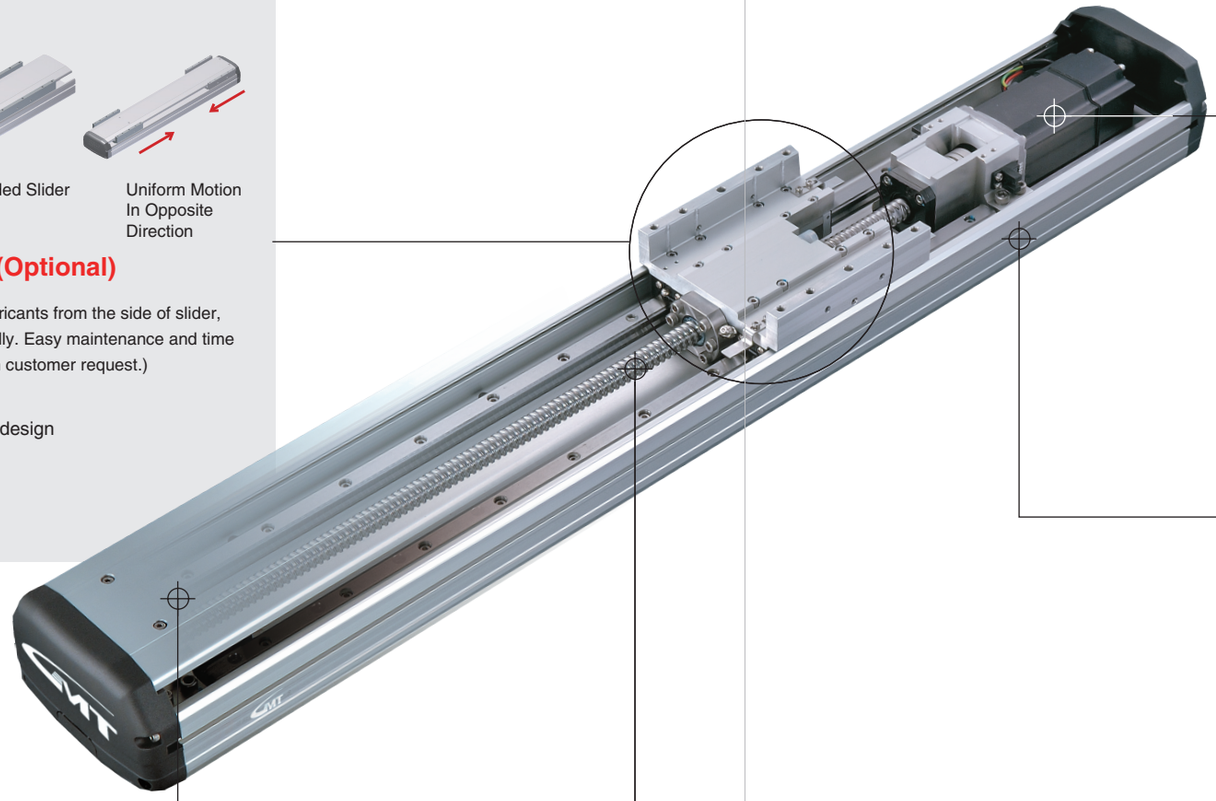

## High Rigidity Body And Cover

**High rigid main body**
is applied to one piece of aluminum extrusion to form an ideal structure, which needs element analysis, such as the ratio of rigidity and weight.

**Torsion in top cover structural design** can prevent defomation during long stoke.

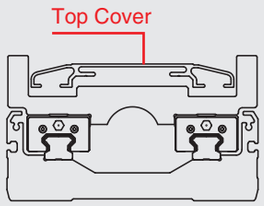






## Motor Brand

Any of servo motors are available to be used with

| Suggested Motor Brands | | | |
|---|---|---|---|
| Mitsubishi | Panasonic | Yaskawa | Delta |

◎Apart from above mentioned brands,please consult us for more details.

## Motor Mounting Options

Various motor mounting options bring the flexibility into your design.

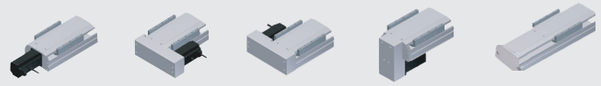

BC In-Line | BL Left Side | BR Right Side | BM Bottom | M In-Line Motor Built-in

## Sensor Options

Internal Type | External Type



Built-In Switch | Built-In Sensor Trigger | Switch | Sensor Trigger

## Ball Screw Pitch & Lead

The dimension of ball screw is optional upon different accuracy and speed request.

| Lead | Pitch |
|---|---|
| 5 | 5 mm |
| 10 | 10 mm |
| 16 | 16 mm |
| 20 | 20 mm |
| 25 | 25 mm |
| 40 | 40 mm |

## Various Slide Options

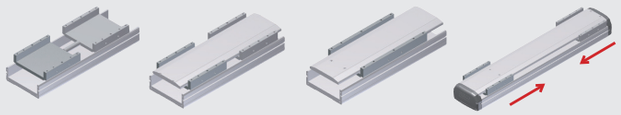

Double Slider (Uniform Motion) | Double Slider (Single Motion) | Extended Slider | Uniform Motion In Opposite Direction

## Belt Tensioner

Apply belt tentioner on both sides for limit adjustment purpose to avoid the possibilities of loosening from belt holder.

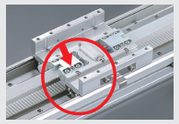

## Patent Grease Fitting Design(Optional)

This patent grease fitting only needs to feed lubricants from the side of slider,and the rest of parts will be refueled automatically.
Easy maintenance and time saving.
(Mounting directions are available upon customer request.)

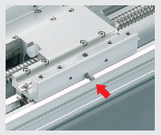

Patent grease fitting design
Copyright©



## High Rigidity Body And Cover

**High rigid main body**
is applied to one piece of aluminum extrusion to form an ideal structure, which needs element analysis, such as the ratio of rigidity and weight.

**Torsion in top cover structural design** can prevent defomation during long stoke.

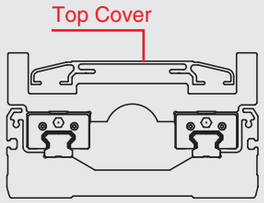


## Sensor Options

External Type Only



Sensor | Seneor Trigger

## Motor Brand

Any of servo motors are available to be used with

| Standard Suitable Motor brands | | | |
|---|---|---|---|
| Mitsubishi | Panasonic | Yaskawa | Delta |

◎Apart from above mentioned brands,please consult us for more details.

## Motor Mounting Options

Various motor mounting options bring the flexibility into your design.

■ Standard Gear Box is available (Optional)

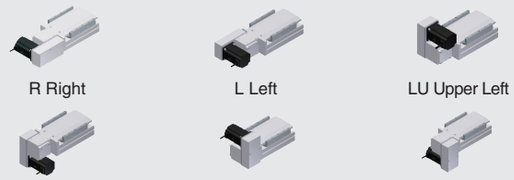

R Right | L Left | LU Upper Left
LD Lower Left | RU Upper Right | RD Lower Right

## Belt Options

Option upon different applications.

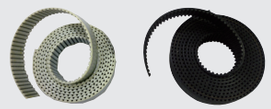

PU belt | Rubber belt

**Comparison Table**

| | PU Belt | Rubber Belt |
|---|---|---|
| Specifications | AT, With Steel Wire | 5GT, With Glass Fiber |
| Application | Clean Room | General Environment |
| Pros | Less Dusty | Dusty |
| Cons | Noisy | Less Noisy |

# GETH5M - L 5 - 100 -

## Model

| Standard Ball Screw | |
|---|---|
| GETH5M | Light Load |
| GETH6M | Light Load |
| GETH10 | Light Load |
| GETH12 | Medium Load |
| GETH13 | Medium Load |
| GETH14 | Heavy Load |
| GETH17 | Heavy Load |
| GETH22 | Super Heavy Load |

## Ball Screw Type

| Ball Screw Type | |
|---|---|
| L | Standard-MIT |

## Ball Screw Lead

| Standard Ball Screw | |
|---|---|
| 02 | 2 mm |
| 05 | 5 mm |
| 10 | 10 mm |
| 16 | 16 mm |
| 20 | 20 mm |
| 25 | 25 mm |
| 40 | 40 mm |

## Stroke

| Ball Screw Outer Diameter | Standard Stroke |
|---|---|
| Ø12 mm | 100-800 mm |
| Ø16 mm | 100-1050 mm |
| Ø20 mm | 100-1250 mm |
| Ø25 mm | 100-1550 mm |



Motorized X-Axis ▶ Ball Screw&Belt Driven ▶ Linear Drive
Model No. Introduction-GETH
GMT GLOBAL INC.
GETH Specifications Introduction

# BC - M10B - C 4 - 0001

Special Order No.

## Motor Position

| Standard Ball Screw | |
|---|---|
| M | In-Line Motor Built-In |
| BC | In-Line Motor |
| BM | Motor at Bottom |
| BL | Motor on Left Side |
| BR | Motor on Right Side |

## Motor Brand , Power Output , Brake

| Stepping Motor | | | |
|---|---|---|---|
| | Motor Brand | Frame Size | Model |
| A | Tamagawa | 42M | 2-Phase-TS3617N3E8 |
| | | 57M | 2-Phase-TS3653N1E2 |
| R | Oriental Motor | 42M | PK245-01A |
| | | 57M | PK264-02A |
| S | Sanyo Denki | 42M | 2-Phase-103H5209-0440 |
| | | 57M | 2-Phase-103H7121-0140 |

| Servo Motor | | | | |
|---|---|---|---|---|
| | Motor Brand | | Power Output | Brake |
| P | Panasonic | 10 | 100W | B※ |
| T | Delta | 20 | 200W | - |
| Y | Yaskawa | 40 | 400W | - |
| M | Mitsubishi | 75 | 750W | - |

※" B " means with brake.
" - " means not applicable.

## Home Sensor

| Internal | |
|---|---|
| A | Motor Side |
| B | Opposite Motor Side |
| **External** | |
| C | Motor Side |
| D | Opposite Motor Side |
| **Without Sensor** | |
| E | Without Sensor |

## Limit Sensor

| Internal | |
|---|---|
| 1 | 1 Pc |
| 2 | 2 Pc |
| **External** | |
| 3 | 1 Pc |
| 4 | 2 Pc |
| **Without Sensor** | |
| 5 | Without Sensor |

| Application Environment | Drive Mode | Model | Motor Output (W) | Width(mm) | Repeatability (mm) | Ball Screw spec(C7) | | Maximum Load(kg) | | Maximum Speed (mm/s)*1 | Stroke (mm) & Maximum Speed (mm/s)*2 ■ Velocity | Page |
|---|---|---|---|---|---|---|---|---|---|---|---|---|
| | | | | | | Outer Diameter (mm) | Lead (mm) | Horizontal | Vertical | | Stroke 100 150 200 250 300 350 400 450 500 550 600 650 700 750 800 850 900 950 1000 1050 1100 1150 1200 1250 1300 1350 1400 1450 1500 | |
| General Environment | Ball Screw | GETH5M | 42M (Stepping Motor) | 51 | ±0.01 | 12 | 2 | 10 | 7 | 16 | 16 | 16 |
| | | | | | | | 5 | 10 | 3 | 41 | 41 | |
| | | | | | | | 10 | 5 | 1.5 | 83 | 83 | |
| | | | 100W | 51 | ±0.01 | 12 | 2 | 10 | 7 | 100 | 100 90 80 70 60 | 20 |
| | | | | | | | 5 | 10 | 3 | 250 | 250 225 200 175 150 | |
| | | | | | | | 10 | 5 | 1.5 | 500 | 500 450 400 350 300 | |
| | | GETH6M | 57M (Stepping Motor) | 65 | ±0.01 | 12 | 2 | 30 | 15 | 16 | 16 | 24 |
| | | | | | | | 5 | 30 | 10 | 41 | 41 | |
| | | | | | | | 10 | 15 | 5 | 83 | 83 | |
| | | | 100W | 65 | ±0.01 | 12 | 2 | 30 | 15 | 100 | 100 90 80 70 60 | 28 |
| | | | | | | | 5 | 30 | 10 | 250 | 250 225 200 175 150 | |
| | | | | | | | 10 | 15 | 5 | 500 | 500 450 400 350 300 | |
| | | GETH10 | 100W | 102 | ±0.01 | 16 | 5 | 50 | 12 | 250 | 250 225 200 175 150 125 | 32 |
| | | | | | | | 10 | 30 | 8 | 500 | 500 450 400 350 300 250 | |
| | | | | | | | 16 | 22 | 5 | 800 | 800 720 640 560 480 400 | |
| | | | | | | | 20 | 18 | 3 | 1000 | 1000 900 800 700 600 500 | |
| | | GETH12 | 100W | 102 | ±0.01 | 16 | 5 | 50 | 12 | 250 | 250 225 200 175 150 125 | 38 |
| | | | | | | | 10 | 30 | 8 | 500 | 500 450 400 350 300 250 | |
| | | | | | | | 16 | 22 | 5 | 800 | 800 720 640 560 480 400 | |
| | | | | | | | 20 | 18 | 3 | 1000 | 1000 900 800 700 600 500 | |
| | | GETH13 | 200W | 135 | ±0.01 | 16 | 5 | 70 | 17 | 250 | 250 225 200 175 150 125 | 44 |
| | | | | | | | 10 | 47 | 12 | 500 | 500 450 400 350 300 250 | |
| | | | | | | | 16 | 30 | 6 | 800 | 800 720 640 560 480 400 | |
| | | | | | | | 20 | 24 | 4 | 1000 | 1000 900 800 700 600 500 | |
| | | GETH14 | 200W | 135 | ±0.01 | 16 | 5 | 95 | 27 | 250 | 250 225 200 175 150 125 | 50 |
| | | | | | | | 10 | 75 | 18 | 500 | 500 450 400 350 300 250 | |
| | | | | | | | 16 | 44 | 7 | 800 | 800 720 640 560 480 400 | |
| | | | | | | | 20 | 35 | 6 | 1000 | 1000 900 800 700 600 500 | |
| | | | 400W | 135 | ±0.01 | 16 | 5 | 110 | 33 | 250 | 250 225 200 175 150 125 | 56 |
| | | | | | | | 10 | 88 | 22 | 500 | 500 450 400 350 300 250 | |
| | | | | | | | 16 | 48 | 10 | 800 | 800 720 640 560 480 400 | |
| | | | | | | | 20 | 40 | 8 | 1000 | 1000 900 800 700 600 500 | |
| | | GETH17 | 400W | 170 | ±0.01 | 20 | 5 | 120 | 40 | 250 | 250 225 200 175 150 | 62 |
| | | | | | | | 10 | 110 | 30 | 500 | 500 450 400 350 300 | |
| | | | | | | | 20 | 75 | 17 | 100 | 1000 900 800 700 600 | |
| | | | | | | | 40 | 35 | 7 | 2000 | 2000 1800 1600 1400 1200 | |
| | | | 750W | 170 | ±0.01 | 20 | 5 | 120 | 50 | 250 | 250 225 200 175 150 | 68 |
| | | | | | | | 10 | 120 | 40 | 500 | 500 450 400 350 300 | |
| | | | | | | | 20 | 83 | 25 | 1000 | 1000 900 800 700 600 | |
| | | | | | | | 40 | 50 | 10 | 2000 | 2000 1800 1600 1400 1200 | |
| | | GETH22 | 750W | 220 | ±0.01 | 25 | 5 | 150 | 55 | 250 | 250 225 200 175 150 125 100 | 72 |
| | | | | | | 25 | 10 | 150 | 45 | 500 | 500 450 400 350 300 250 200 | |
| | | | | | | 25 | 25 | 120 | 20 | 1250 | 1250 1125 1000 875 750 625 500 | |
| | | | | | | 20 | 40 | 60 | 10 | 2000 | 2000 1800 1600 1400 1200 1000 800 600 | |

*1：The above values with reference to the maximum of 3000 RPM is for servo motor;the maximum of 500RPM is for stepping motor.

*2：Performance within above mentioned range is safe.Beyond the limited range may cause vibration.

# GETH5M
## Single Axis
## Ball Screw Driven

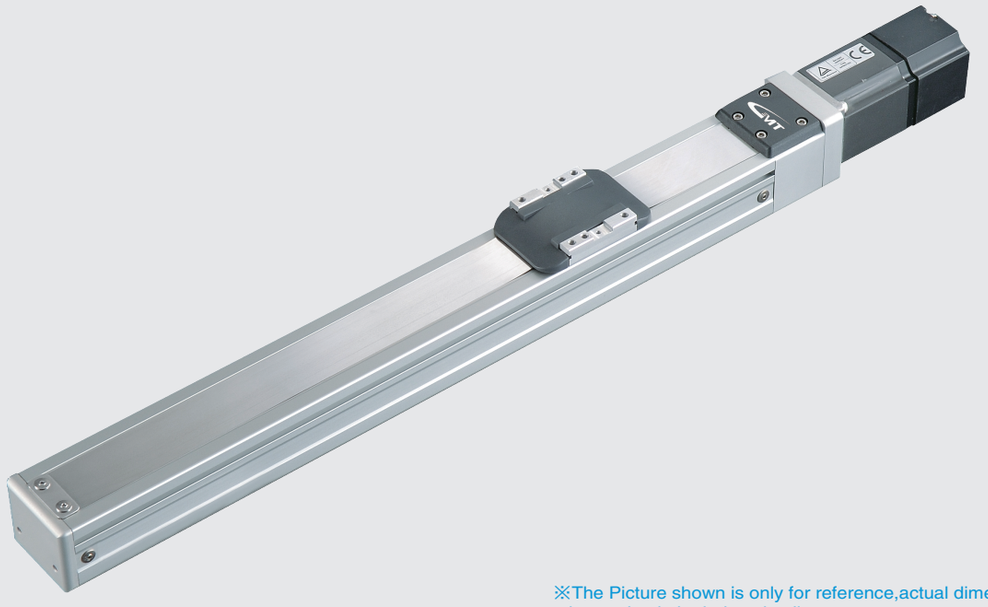

※The Picture shown is only for reference,actual dimension please check the below details.

Maximum Stroke 800 mm | Maximum Speed 83 mm/s | Motor Output □42 mm | Ball Screw Ø12 mm | Linear Guide 24X8.5-1 Pc

## Ordering Method

GETH5M - L 5 - 100 - BC - 42 M - C 4 - 0001

Model

**Ball Screw**

| | |
|---|---|
| L | Standard-MIT |

**Stroke**

| |
|---|
| 100-800 mm<br>50 mm Pitch |

**Ball Screw Lead**

| | |
|---|---|
| 02 | 02mm |
| 05 | 05mm |
| 10 | 10mm |

**Motor Position**

| | |
|---|---|
| BC | In-Line Motor |
| BM | Motor at Bottom |
| BR | Motor on Right Side |
| BL | Motor on Left Side |

**Motor Brand**

| | |
|---|---|
| Tamagawa | TS3617N3E8 |
| Oriental motor | PK245-01A |
| Sanyo denki | 103H5209-0440 |

**Home Sensor**

| | |
|---|---|
| External | |
| C | Motor Side |
| D | Opposite Motor Side |
| Without Sensor | |
| E | Without Sensor |

**Limit Sensor**

| | |
|---|---|
| External | |
| 3 | 1 Pc |
| 4 | 2 Pc |
| Without Sensor | |
| 5 | Without Sensor |

Special Order No.



GMT GLOBAL INC.
Motorized X-Axis ▶ Ball Screw Driven ▶ Linear Drive
GETH5M
GETH Specifications Introduction

## Specifications

| | | | | | |
|---|---|---|---|---|---|
| Performance | Repeatability (mm) | | ±0.01 | | |
| | Lead (mm) | | 2 | 5 | 10 |
| | Maximum Speed (mm / s) | | 16 | 41 | 83 |
| | Maximum Load | Horizontal (kg) | 10 | 10 | 5 |
| | | Vertical (kg) | 7 | 3 | 1.5 |
| | Rated Thrust (N) | | 854 | 341 | 170 |
| | Stroke / Pitch (mm) | | 100-800 mm / 50 mm Pitch | | |
| Parts | Ball Screw Precision & Ø (mm) | | C7Ø12 | | |
| | High Rigidity Linear Guide (mm) | | 24X8.5 | | |
| | Coupling (mm) | | 7X5 | | |
| | Home Sensor | External | EE-SX672 (NPN) | | |

## Sensor Circuit Diagram

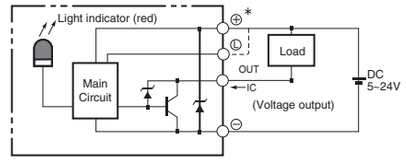


## Allowable Overhang (N.m)

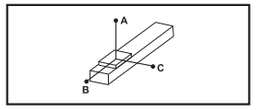


(Unit:mm)

| Horizontal Installation | | A | B | C |
|---|---|---|---|---|
| Lead2 | 5 kg | 700 | 29 | 71 |
| | 10 kg | 380 | 12 | 33 |
| Lead5 | 4 kg | 515 | 58 | 135 |
| | 7 kg | 340 | 26 | 62 |
| Lead 10 | 3 kg | 433 | 87 | 180 |
| | 5 kg | 223 | 33 | 75 |

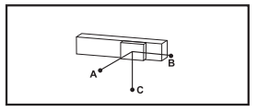


(Unit:mm)

| Wall Installation | | A | B | C |
|---|---|---|---|---|
| Lead2 | 5 kg | 56 | 12 | 500 |
| | 10 kg | 16 | 0 | 220 |
| Lead5 | 4 kg | 107 | 24 | 380 |
| | 7 kg | 31 | 0 | 195 |
| Lead 10 | 3 kg | 149 | 54 | 376 |
| | 5 kg | 50 | 1 | 148 |

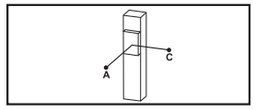


(Unit:mm)

| Vertical Installation | | A | C |
|---|---|---|---|
| Lead2 | 3 kg | 40 | 41 |
| | 7 kg | 0 | 0 |
| Lead5 | 3 kg | 56 | 57 |
| Lead 10 | 1.5 kg | 125 | 125 |

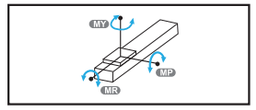


(Unit:N.m)

| Static Loading Moment | |
|---|---|
| MY | 16 |
| MP | 20 |
| MR | 19 |

## Stepping Motor Options

| Brand | AC-Voltage | Stepping Motor Model | Driver Model |
|---|---|---|---|
| Tamagawa | DC24V | 2-phase-TS3617N3E8 | CD-2D34M Resolution 200/400/800/1600 |
| Oriental motor | Single-phase100V | 2-phase-PK245-01A | UDK2112 Resolution 200/400/800/1600/3200 |
| Sanyo Denki | DC24V | 2-phase-103H5209-0440 | US1D200P10 Resolution 200/400/800/1600/3200 |

# GETH5M
## Single Axis
## In-Line Motor/ Motor at Bottom

### BC In-Line Motor

2D CAD 3D CAD • CAD Download : www.gmtlinear.com •

(Unit:mm)

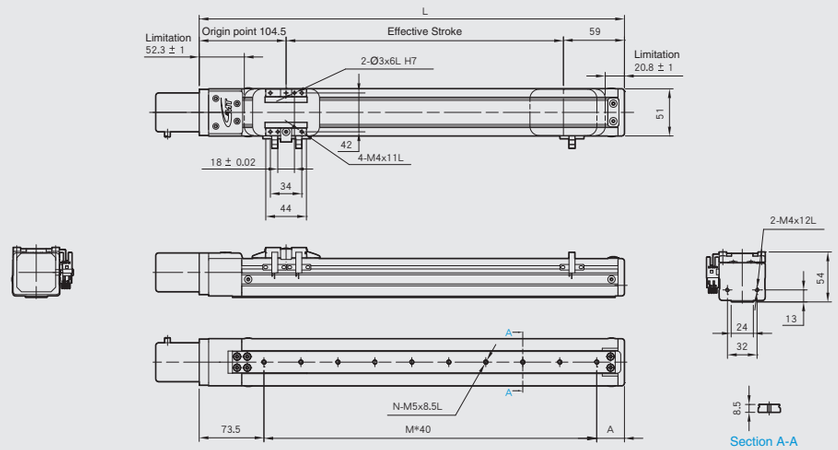


| Stroke | 100 | 150 | 200 | 250 | 300 | 350 | 400 | 450 | 500 | 550 | 600 | 650 | 700 | 750 | 800 |
|---|---|---|---|---|---|---|---|---|---|---|---|---|---|---|---|
| L | 263.5 | 313.5 | 363.5 | 413.5 | 463.5 | 513.5 | 563.5 | 613.5 | 663.5 | 713.5 | 763.5 | 813.5 | 863.5 | 913.5 | 963.5 |
| A | 30 | 40 | 50 | 60 | 30 | 40 | 50 | 60 | 30 | 40 | 50 | 60 | 30 | 40 | 50 |
| M | 4 | 5 | 6 | 7 | 9 | 10 | 11 | 12 | 14 | 15 | 16 | 17 | 19 | 20 | 21 |
| N | 5 | 6 | 7 | 8 | 10 | 11 | 12 | 13 | 15 | 16 | 17 | 18 | 20 | 21 | 22 |
| KG | 1.71 | 1.85 | 2 | 2.14 | 2.29 | 2.44 | 2.58 | 2.73 | 2.87 | 3.02 | 3.17 | 3.31 | 3.46 | 3.6 | 3.75 |

### BM Motor at Bottom

2D CAD 3D CAD • CAD Download : www.gmtlinear.com •

(Unit:mm)

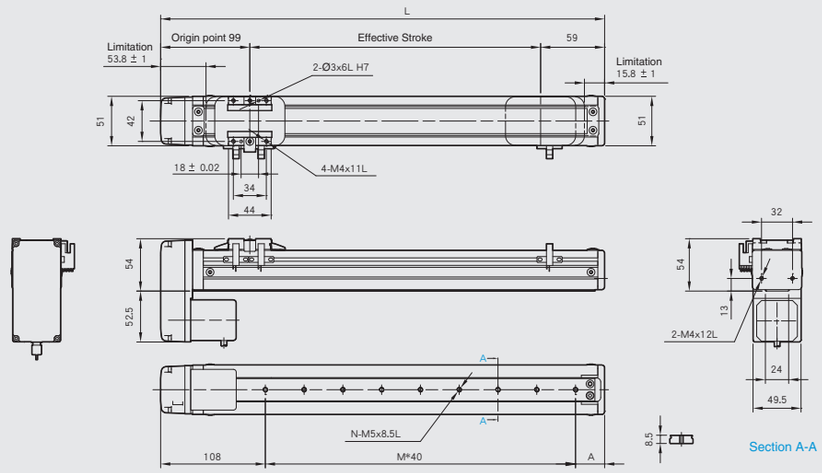


| Stroke | 100 | 150 | 200 | 250 | 300 | 350 | 400 | 450 | 500 | 550 | 600 | 650 | 700 | 750 | 800 |
|---|---|---|---|---|---|---|---|---|---|---|---|---|---|---|---|
| L | 258 | 308 | 358 | 408 | 458 | 508 | 558 | 608 | 658 | 708 | 758 | 808 | 858 | 908 | 958 |
| A | 30 | 40 | 50 | 60 | 30 | 40 | 50 | 60 | 30 | 40 | 50 | 60 | 30 | 40 | 50 |
| M | 3 | 4 | 5 | 6 | 8 | 9 | 10 | 11 | 13 | 14 | 15 | 16 | 18 | 19 | 20 |
| N | 4 | 5 | 6 | 8 | 9 | 10 | 11 | 13 | 14 | 15 | 16 | 18 | 19 | 20 | 21 |
| KG | 1.81 | 1.95 | 2.10 | 2.24 | 2.39 | 2.54 | 2.68 | 2.83 | 2.97 | 3.12 | 3.27 | 3.41 | 3.56 | 3.7 | 3.85 |





# GETH5M
## Single Axis
## Motor on Right Side / Motor on Left Side

### BL Motor on Left Side

2D CAD 3D CAD • CAD Download : www.gmtlinear.com •

(Unit:mm)

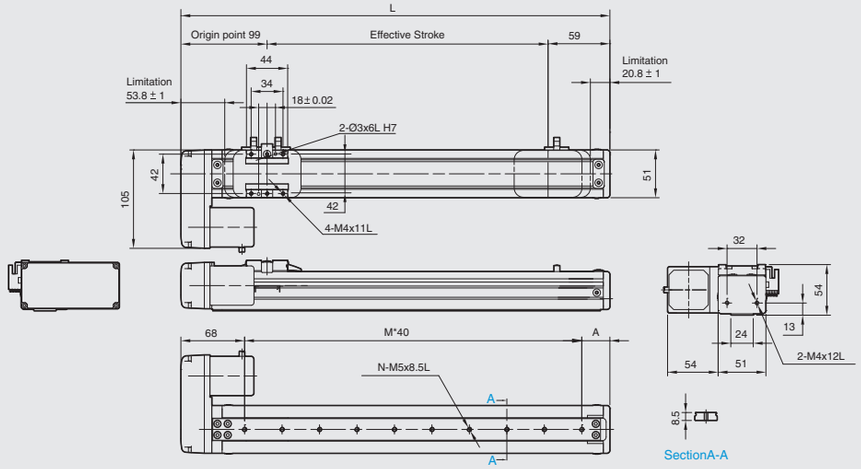


| Stroke | 100 | 150 | 200 | 250 | 300 | 350 | 400 | 450 | 500 | 550 | 600 | 650 | 700 | 750 | 800 |
|---|---|---|---|---|---|---|---|---|---|---|---|---|---|---|---|
| L | 258 | 308 | 358 | 408 | 458 | 508 | 558 | 608 | 658 | 708 | 758 | 808 | 858 | 908 | 958 |
| A | 30 | 40 | 50 | 60 | 30 | 40 | 50 | 60 | 30 | 40 | 50 | 60 | 30 | 40 | 50 |
| M | 3 | 4 | 5 | 6 | 8 | 9 | 10 | 11 | 13 | 14 | 15 | 16 | 18 | 19 | 20 |
| N | 4 | 5 | 6 | 8 | 9 | 10 | 11 | 13 | 14 | 15 | 16 | 18 | 19 | 20 | 21 |
| KG | 1.81 | 1.95 | 2.10 | 2.24 | 2.39 | 2.54 | 2.68 | 2.83 | 2.97 | 3.12 | 3.27 | 3.41 | 3.56 | 3.7 | 3.85 |

### BR Motor on Right Side

2D CAD 3D CAD • CAD Download : www.gmtlinear.com •

(Unit:mm)

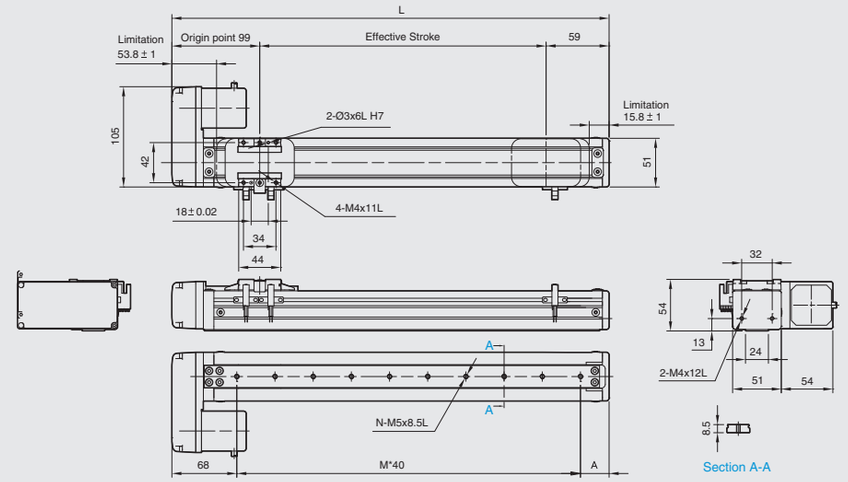


| Stroke | 100 | 150 | 200 | 250 | 300 | 350 | 400 | 450 | 500 | 550 | 600 | 650 | 700 | 750 | 800 |
|---|---|---|---|---|---|---|---|---|---|---|---|---|---|---|---|
| L | 258 | 308 | 358 | 408 | 458 | 508 | 558 | 608 | 658 | 708 | 758 | 808 | 858 | 908 | 958 |
| A | 30 | 40 | 50 | 60 | 30 | 40 | 50 | 60 | 30 | 40 | 50 | 60 | 30 | 40 | 50 |
| M | 3 | 4 | 5 | 6 | 8 | 9 | 10 | 11 | 13 | 14 | 15 | 16 | 18 | 19 | 20 |
| N | 4 | 5 | 6 | 8 | 9 | 10 | 11 | 13 | 14 | 15 | 16 | 18 | 19 | 20 | 21 |
| KG | 1.81 | 1.95 | 2.10 | 2.24 | 2.39 | 2.54 | 2.68 | 2.83 | 2.97 | 3.12 | 3.27 | 3.41 | 3.56 | 3.7 | 3.85 |

# GETH5M
## Single Axis
## Ball Screw Driven



Maximum Stroke 800 mm | Maximum Speed 500 mm/s | Motor Output 100W | Ball Screw Ø12 mm | Linear Guide 24X8.5-1Pc

## Ordering Method

GETH5M - L 5 - 100 - BC - M10B - C 4 - 0001

Model

**Ball Screw**

| | |
|---|---|
| L | Standard-MIT |

**Stroke**

100-800 mm
50 Pitch

**Special Order No.**

**Ball Screw Lead**

| | |
|---|---|
| 02 | 02mm |
| 05 | 05mm |
| 10 | 10mm |

**Motor Position**

| | |
|---|---|
| BC | In-Line Motor |
| BM | Motor at Bottom |
| BR | Motor on Right Side |
| BL | Motor on Left Side |

**Motor Brand , Power Output**

| | | | | |
|---|---|---|---|---|
| M | Mitsubishi | 10 | 100W | B※ |
| P | Panasonic | 20 | - | |
| Y | Yaskawa | 40 | - | |
| T | Delta | 75 | - | |

※" B " means with brake.
" - " means not applicable.

**Home Sensor**

| | |
|---|---|
| External | |
| C | Motor Side |
| D | Opposite Motor Side |
| Without Sensor | |
| E | Without Sensor |

**Limit Sensor**

| | |
|---|---|
| External | |
| 3 | 1 Pc |
| 4 | 2 Pc |
| Without Sensor | |
| 5 | Without Sensor |



Motorized X-Axis ▶ Ball Screw Driven ▶ Linear Drive
GETH5M
GETH Specifications Introduction

## Specifications

| | | | | |
|---|---|---|---|---|
| Performance | Repeatability (mm) | | ±0.01 | |
| | Lead (mm) | | 2 | 5 | 10 |
| | Maximum Speed (mm / s) | | 100 | 250 | 500 |
| | Maximum Load | Horizontal (kg) | 10 | 10 | 5 |
| | | Vertical (kg) | 7 | 3 | 1.5 |
| | Rated Thrust (N) | | 854 | 341 | 170 |
| | Stroke / Pitch (mm) | | 100-800 mm / 50 mm Pitch | |
| Parts | Ball Screw Precision & Ø (mm) | | C7Ø12 | |
| | H igh Rigidity Linear Guide (mm) | | 24X8.5 | |
| | Coupling (mm) | | 7X8 | |
| | Home Sensor | External | EE-SX672 (NPN) | |

※Shaft runout will occur when the stroke is over 600 mm, deflection will be the best solution to execute at that moment.

## Sensor Circuit Diagram

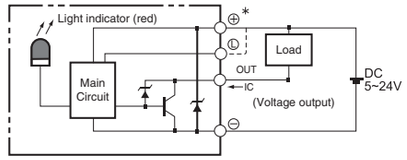


## Allowable Overhang (N.m)

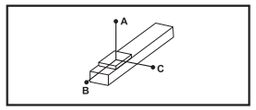


(Unit:mm)

| Horizontal Installation | | A | B | C |
|---|---|---|---|---|
| Lead2 | 5 kg | 700 | 29 | 71 |
| | 10 kg | 380 | 12 | 33 |
| Lead5 | 4 kg | 515 | 58 | 135 |
| | 7 kg | 340 | 26 | 62 |
| Lead 10 | 3 kg | 433 | 87 | 180 |
| | 5 kg | 223 | 33 | 75 |

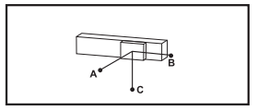


(Unit:mm)

| Wall Installation | | A | B | C |
|---|---|---|---|---|
| Lead2 | 5kg | 56 | 12 | 500 |
| | 10kg | 16 | 0 | 220 |
| Lead5 | 4kg | 107 | 24 | 380 |
| | 7kg | 31 | 0 | 195 |
| Lead 10 | 3kg | 149 | 54 | 376 |
| | 5kg | 50 | 1 | 148 |

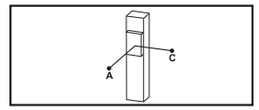


(Unit:mm)

| Vertical Installation | | A | C |
|---|---|---|---|
| Lead2 | 3kg | 40 | 41 |
| | 7kg | 0 | 0 |
| Lead5 | 3kg | 56 | 57 |
| Lead 10 | 1.5kg | 125 | 125 |

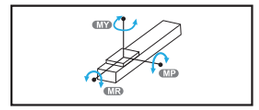


(Unit:N.m)

| Static Loading Moment | |
|---|---|
| MY | 16 |
| MP | 20 |
| MR | 19 |

## Servo Motor Options

| Brand | Mark | Brake | Motor Output | AC-Voltage | Motor Model | Driver Model |
|---|---|---|---|---|---|---|
| Mitsubishi | M | Without Brake (Horizontal Type) | 100 | 220 | HF-KP13 | MR-J3-10A |
| | | With Brake (Vertical Type) | 100 | 220 | HF-KP13B | MR-J3-10A |
| Panasonic | P | Without Brake (Horizontal Type) | 100 | 220 | MSMD012P1S | MADDT1205 |
| | | With Brake (Vertical Type) | 100 | 220 | MSMD012P1T | MADDT1205 |
| Delta | T | Without Brake (Horizontal Type) | 100 | 220 | ECMA-C20401ES | ASD-B20121-B |
| | | With Brake (Vertical Type) | 100 | 220 | ECMA-C20401FS | ASD-B20121-B |

# GETH5M
## Single Axis
## In-Line Motor / Motor at Bottom

### BC In-Line Motor

2D CAD 3D CAD • CAD Download : www.gmtlinear.com •

(Unit:mm)

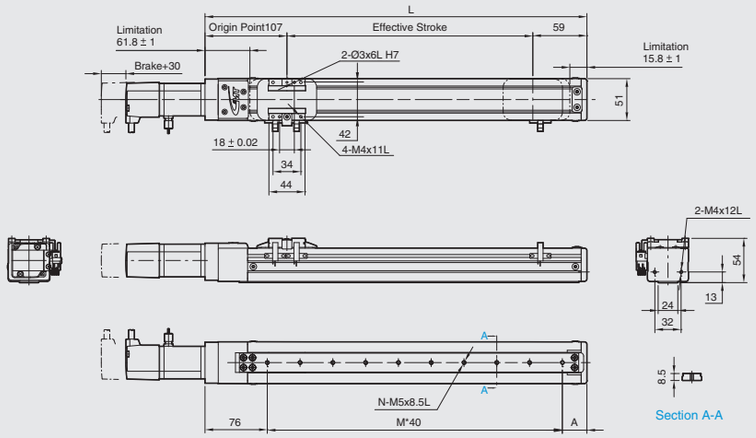


| Stroke | 100 | 150 | 200 | 250 | 300 | 350 | 400 | 450 | 500 | 550 | 600 | 650 | 700 | 750 | 800 |
|---|---|---|---|---|---|---|---|---|---|---|---|---|---|---|---|
| L | 266 | 316 | 366 | 416 | 466 | 516 | 566 | 616 | 666 | 716 | 766 | 816 | 866 | 916 | 966 |
| A | 30 | 40 | 50 | 60 | 30 | 40 | 50 | 60 | 30 | 40 | 50 | 60 | 30 | 40 | 50 |
| M | 4 | 5 | 6 | 7 | 9 | 10 | 11 | 12 | 14 | 15 | 16 | 17 | 19 | 20 | 21 |
| N | 5 | 6 | 7 | 8 | 10 | 11 | 12 | 13 | 15 | 16 | 17 | 18 | 20 | 21 | 22 |
| KG | 1.71 | 1.85 | 2 | 2.14 | 2.29 | 2.44 | 2.58 | 2.73 | 2.87 | 3.02 | 3.17 | 3.31 | 3.46 | 3.6 | 3.75 |

### BM Motor at Bottom

2D CAD 3D CAD • CAD Download : www.gmtlinear.com •

(Unit:mm)

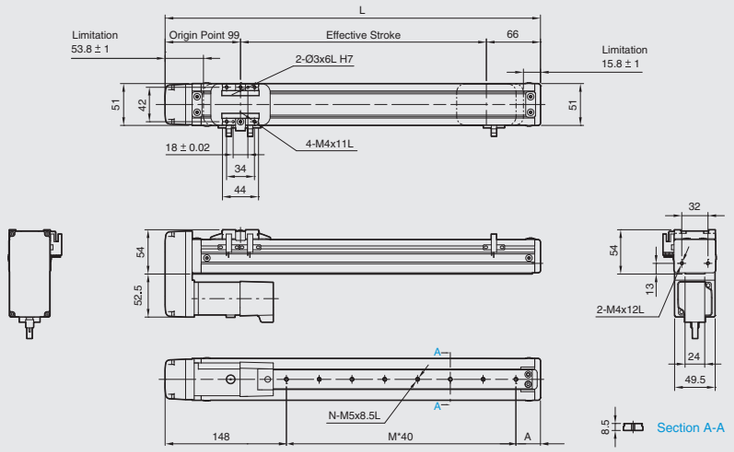


| Stroke | 100 | 150 | 200 | 250 | 300 | 350 | 400 | 450 | 500 | 550 | 600 | 650 | 700 | 750 | 800 |
|---|---|---|---|---|---|---|---|---|---|---|---|---|---|---|---|
| L | 258 | 308 | 358 | 408 | 458 | 508 | 558 | 608 | 658 | 708 | 758 | 808 | 858 | 908 | 958 |
| A | 30 | 40 | 50 | 60 | 30 | 40 | 50 | 60 | 30 | 40 | 50 | 60 | 30 | 40 | 50 |
| M | 2 | 3 | 4 | 5 | 7 | 8 | 9 | 10 | 12 | 13 | 14 | 15 | 17 | 18 | 19 |
| N | 3 | 4 | 5 | 6 | 8 | 9 | 10 | 11 | 13 | 14 | 15 | 16 | 18 | 19 | 20 |
| KG | 1.81 | 1.95 | 2.10 | 2.24 | 2.39 | 2.54 | 2.68 | 2.83 | 2.97 | 3.12 | 3.27 | 3.41 | 3.56 | 3.7 | 3.85 |





# GETH5M
## Single Axis
## Motor on Left Side / Motor on Right Side

### BL Motor on Left Side

2D CAD 3D CAD • CAD Download : www.gmtlinear.com •

(Unit:mm)

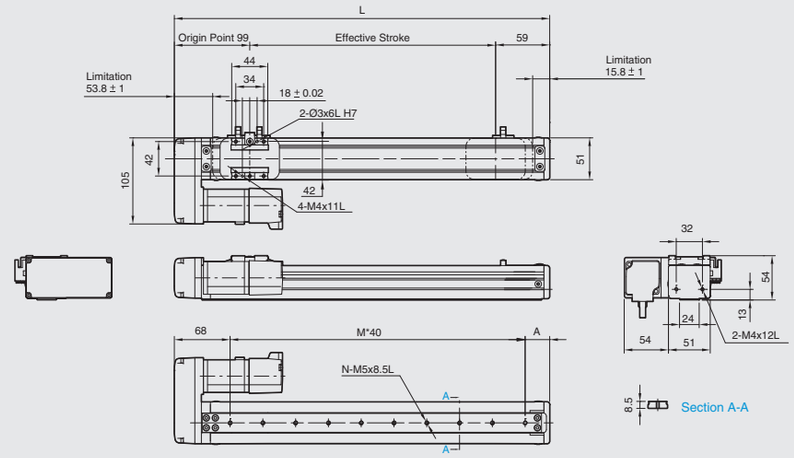


| Stroke | 100 | 150 | 200 | 250 | 300 | 350 | 400 | 450 | 500 | 550 | 600 | 650 | 700 | 750 | 800 |
|---|---|---|---|---|---|---|---|---|---|---|---|---|---|---|---|
| L | 258 | 308 | 358 | 408 | 458 | 508 | 558 | 608 | 658 | 708 | 758 | 808 | 858 | 908 | 958 |
| A | 30 | 40 | 50 | 60 | 30 | 40 | 50 | 60 | 30 | 40 | 50 | 60 | 30 | 40 | 50 |
| M | 2 | 3 | 4 | 5 | 7 | 8 | 9 | 10 | 12 | 13 | 14 | 15 | 17 | 18 | 19 |
| N | 3 | 4 | 5 | 6 | 8 | 9 | 10 | 11 | 13 | 14 | 15 | 16 | 18 | 19 | 20 |
| KG | 1.81 | 1.95 | 2.10 | 2.24 | 2.39 | 2.54 | 2.68 | 2.83 | 2.97 | 3.12 | 3.27 | 3.41 | 3.56 | 3.7 | 3.85 |

### BR Motor on Right Side

2D CAD 3D CAD • CAD Download : www.gmtlinear.com •

(Unit:mm)

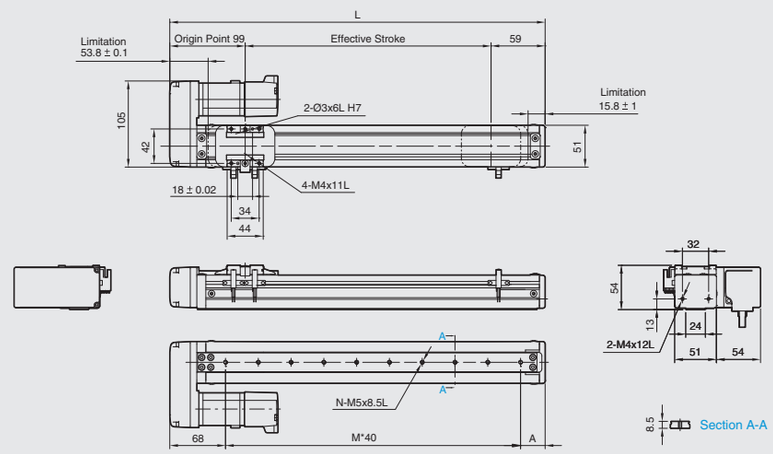


| Stroke | 100 | 150 | 200 | 250 | 300 | 350 | 400 | 450 | 500 | 550 | 600 | 650 | 700 | 750 | 800 |
|---|---|---|---|---|---|---|---|---|---|---|---|---|---|---|---|
| L | 258 | 308 | 358 | 408 | 458 | 508 | 558 | 608 | 658 | 708 | 758 | 808 | 858 | 908 | 958 |
| A | 30 | 40 | 50 | 60 | 30 | 40 | 50 | 60 | 30 | 40 | 50 | 60 | 30 | 40 | 50 |
| M | 2 | 3 | 4 | 5 | 7 | 8 | 9 | 10 | 12 | 13 | 14 | 15 | 17 | 18 | 19 |
| N | 3 | 4 | 5 | 6 | 8 | 9 | 10 | 11 | 13 | 14 | 15 | 16 | 18 | 19 | 20 |
| KG | 1.81 | 1.95 | 2.10 | 2.24 | 2.39 | 2.54 | 2.68 | 2.83 | 2.97 | 3.12 | 3.27 | 3.41 | 3.56 | 3.7 | 3.85 |

# GETH6M
## Single Axis
## Ball Screw Driven



Maximum Stroke 800 mm | Maximum Speed 83 mm/s | Motor Output □57 | Ball Screw Ø12mm | Linear Guide 9.5X42-1Pc

## Ordering Method

GETH6M - L 5 - 100 - BC - 57 M - C 4 - M5 - 0001

Model | Special Order No.

**Ball Screw**

| | |
|---|---|
| L | Standard-MIT |

**Stroke**

| |
|---|
| 100-800 mm |
| 50 mm Pitch |

**Installation Hole**

| | |
|---|---|
| Install On Bottom | M5 |
| Install On Internal | - |

**Ball Screw Lead**

| | |
|---|---|
| 02 | 02mm |
| 05 | 05mm |
| 10 | 10mm |

**Motor Position**

| | |
|---|---|
| BC | In-Line Motor |
| BM | Motor at Bottom |
| BR | Motor on Right Side |
| BL | Motor on Left Side |

**Motor Brand**

| | |
|---|---|
| Tamagawa | TS3617N3E8 |
| Oriental motor | PK264-02A |
| Sanyo denki | 103H5209-0440 |

**Home Sensor**

| | |
|---|---|
| Extrnal | |
| C | Motor Side |
| D | Opposite Motor Side |
| Without Sensor | |
| E | Without Sensor |

**Limit Sensor**

| | |
|---|---|
| Extrnal | |
| 3 | 1 Pc |
| 4 | 2 Pc |
| Without Sensor | |
| 5 | Without Sensor |



Motorized X-Axis ▶ Ball Screw Driven ▶ Linear Drive
GETH6M
GMT GLOBAL INC.
GETH Specifications Introduction

## Specifications

| | | | | | |
|---|---|---|---|---|---|
| Performance | Repeatability (mm) | | ±0.01 | | |
| | Lead (mm) | | 2 | 5 | 10 |
| | Maximum Speed (mm / s) | | 16 | 41 | 83 |
| | Maximum Load | Horizontal (kg) | 30 | 30 | 15 |
| | | Vertical (kg) | 15 | 10 | 5 |
| | Rated Thrust (N) | | 1225 | 490 | 245 |
| | Stroke / Pitch (mm) | | 100-800 mm / 50 mm Pitch | | |
| Parts | Ball Screw Precision & Ø (mm) | | C7Ø12 | | |
| | High Rigidity Linear Guide (mm) | | 9.5X42 | | |
| | Coupling (mm) | | 7X6.35 | | |
| | Home Sensor | External | EE-SX672 (NPN) | | |

## Sensor Circuit Diagram

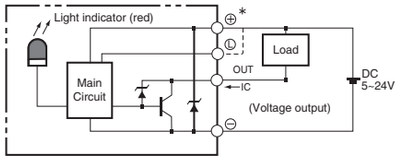


## Allowable Overhang (N.m)

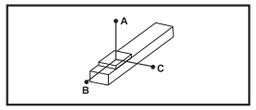


(Unit:mm)

| Horizontal Installation | | A | B | C |
|---|---|---|---|---|
| Lead2 | 10 kg | 898 | 34 | 120 |
| | 30 kg | 350 | 0 | 27 |
| Lead5 | 10 kg | 374 | 33 | 109 |
| | 30 kg | 159 | 0 | 25 |
| | - | - | - | - |
| Lead 10 | 3 kg | 624 | 125 | 335 |
| | 8 kg | 273 | 41 | 121 |
| | 15 kg | 216 | 24 | 77 |

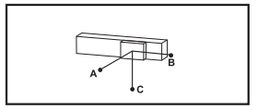


(Unit:mm)

| Wall Installation | | A | B | C |
|---|---|---|---|---|
| Lead2 | 15 kg | 25 | 0 | 110 |
| | 30 kg | 0 | 0 | 0 |
| Lead5 | 5 kg | 204 | 45 | 530 |
| | 10 kg | 72 | 0 | 245 |
| | 30 kg | 0 | 0 | 0 |
| Lead 10 | 3 kg | 293 | 96 | 510 |
| | 8 kg | 89 | 14 | 210 |
| | 15 kg | 43 | 0 | 130 |

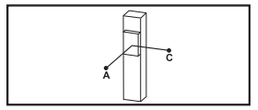


(Unit:mm)

| Vertical Installation | | A | C |
|---|---|---|---|
| Lead2 | 5 kg | 58 | 58 |
| | 15 kg | 0 | 0 |
| Lead5 | 2 kg | 171 | 172 |
| | 4 kg | 73 | 74 |
| | 10 kg | 23 | 26 |
| Lead 10 | 1 kg | 355 | 352 |
| | 2 kg | 165 | 165 |
| | 5 kg | 70 | 72 |

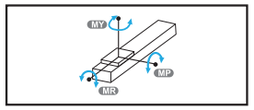


(Unit:N.m)

| Static Loading Moment | |
|---|---|
| MY | 70 |
| MP | 80 |
| MR | 75 |

## Stepping Motor Options

| Brand | AC-Voltage | Stepping Motor Model | Driver Model |
|---|---|---|---|
| Tamagawa | DC24V | 2-phase-TS3653N1E2 | CD-2D34M Resolution 200/400/800/1600 |
| Oriental motor | DC24V | 2-phase-PK264-02A | CMD2120P Resolution 200/400/800/1600/3200 |
| Sanyo Denki | DC24V | 2-phase-103H7121-0140 | US1D200P10 Resolution 200/400/800/1600/3200 |

# GETH6M
## Single Axis
## In-Line Motor / Motor at Bottom

### BC In-Line Motor

2D CAD 3D CAD • CAD Download : www.gmtlinear.com •

(Unit:mm)

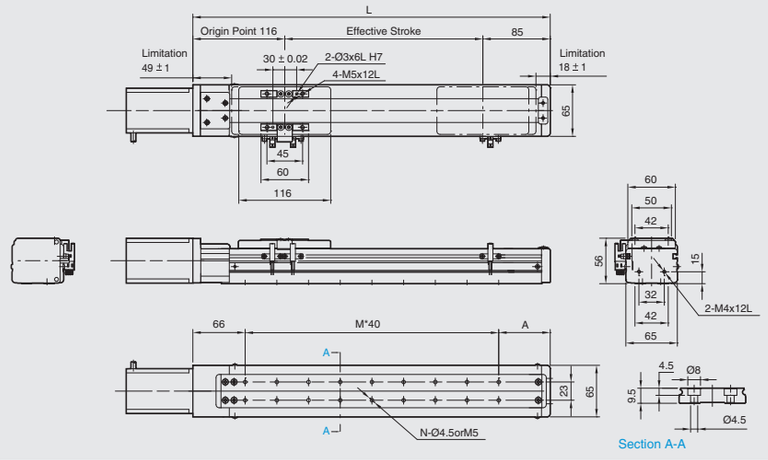


| Stroke | 100 | 150 | 200 | 250 | 300 | 350 | 400 | 450 | 500 | 550 | 600 | 650 | 700 | 750 | 800 |
|---|---|---|---|---|---|---|---|---|---|---|---|---|---|---|---|
| L | 301 | 351 | 401 | 451 | 501 | 551 | 601 | 651 | 701 | 751 | 801 | 851 | 901 | 951 | 1001 |
| A | 35 | 45 | 55 | 65 | 35 | 45 | 55 | 65 | 35 | 45 | 55 | 65 | 35 | 45 | 55 |
| M | 5 | 6 | 7 | 8 | 10 | 11 | 12 | 13 | 15 | 16 | 17 | 18 | 20 | 21 | 22 |
| N | 12 | 14 | 16 | 18 | 22 | 24 | 26 | 28 | 32 | 34 | 36 | 38 | 42 | 44 | 48 |
| KG | 2.82 | 3.05 | 3.27 | 3.5 | 3.72 | 3.94 | 4.17 | 4.39 | 4.62 | 4.84 | 5.06 | 5.29 | 5.51 | 5.74 | 5.94 |

### BM Motor at Bottom

2D CAD 3D CAD • CAD Download : www.gmtlinear.com •

(Unit:mm)

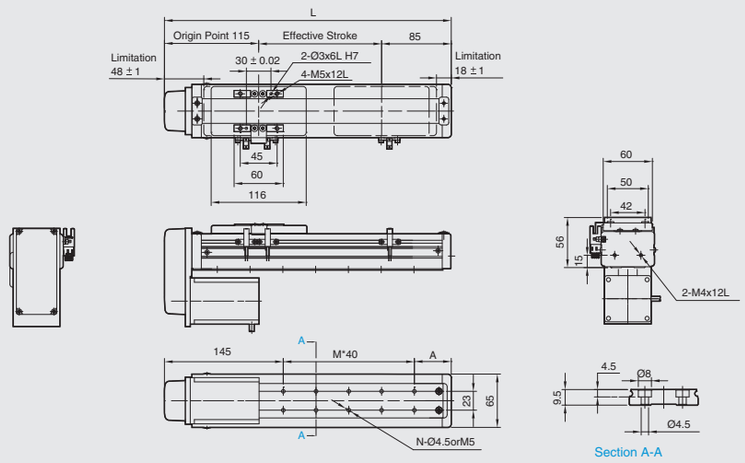


| Stroke | 100 | 150 | 200 | 250 | 300 | 350 | 400 | 450 | 500 | 550 | 600 | 650 | 700 | 750 | 800 |
|---|---|---|---|---|---|---|---|---|---|---|---|---|---|---|---|
| L | 300 | 350 | 400 | 450 | 500 | 550 | 600 | 650 | 700 | 750 | 800 | 850 | 900 | 950 | 1000 |
| A | 35 | 40 | 55 | 65 | 35 | 45 | 55 | 65 | 35 | 45 | 55 | 65 | 35 | 45 | 55 |
| M | 3 | 4 | 5 | 6 | 8 | 9 | 10 | 11 | 13 | 14 | 15 | 16 | 18 | 19 | 20 |
| N | 8 | 10 | 12 | 14 | 18 | 20 | 22 | 24 | 28 | 30 | 32 | 34 | 38 | 40 | 42 |
| KG | 2.86 | 3.09 | 3.31 | 3.54 | 3.77 | 3.99 | 4.22 | 4.44 | 4.67 | 4.90 | 5.12 | 5.35 | 5.57 | 5.80 | 5.99 |





# GETH6M
## Single Axis
## Motor on Left Side / Motor on Right Side

### BL Motor on Left Side

2D CAD 3D CAD • CAD Download : www.gmtlinear.com •

(Unit:mm)

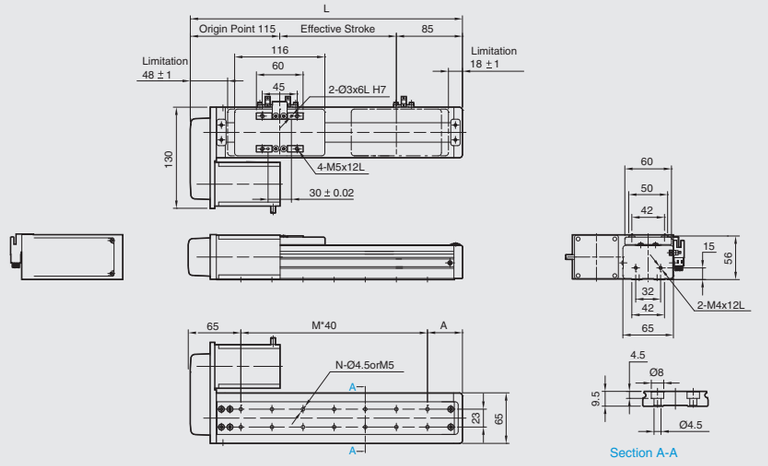


| Stroke | 100 | 150 | 200 | 250 | 300 | 350 | 400 | 450 | 500 | 550 | 600 | 650 | 700 | 750 | 800 |
|---|---|---|---|---|---|---|---|---|---|---|---|---|---|---|---|
| L | 300 | 350 | 400 | 450 | 500 | 550 | 600 | 650 | 700 | 750 | 800 | 850 | 900 | 950 | 1000 |
| A | 35 | 45 | 55 | 65 | 35 | 45 | 55 | 65 | 35 | 45 | 55 | 65 | 35 | 45 | 55 |
| M | 5 | 6 | 7 | 8 | 10 | 11 | 12 | 13 | 15 | 16 | 17 | 18 | 20 | 21 | 22 |
| N | 12 | 14 | 16 | 18 | 22 | 24 | 26 | 28 | 32 | 34 | 36 | 38 | 42 | 44 | 46 |
| KG | 2.86 | 3.09 | 3.31 | 3.54 | 3.77 | 3.99 | 4.22 | 4.44 | 4.67 | 4.90 | 5.12 | 5.35 | 5.57 | 5.80 | 5.99 |

### BR Motor on Right Side

2D CAD 3D CAD • CAD Download : www.gmtlinear.com •

(Unit:mm)

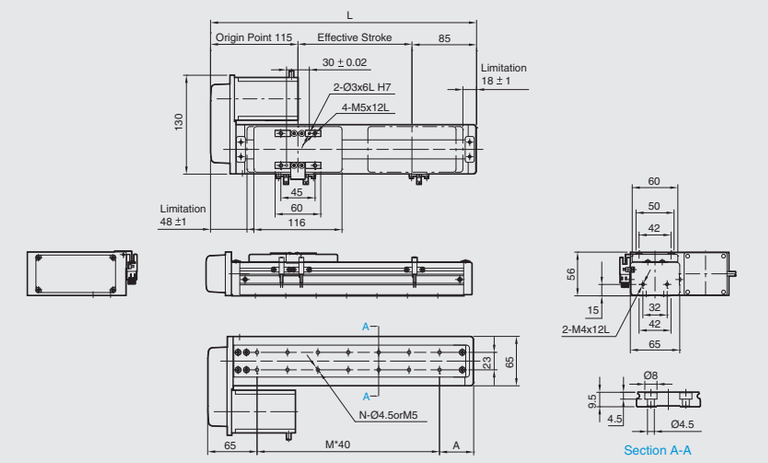


| Stroke | 100 | 150 | 200 | 250 | 300 | 350 | 400 | 450 | 500 | 550 | 600 | 650 | 700 | 750 | 800 |
|---|---|---|---|---|---|---|---|---|---|---|---|---|---|---|---|
| L | 300 | 350 | 400 | 450 | 500 | 550 | 600 | 650 | 700 | 750 | 800 | 850 | 900 | 950 | 1000 |
| A | 35 | 45 | 55 | 65 | 35 | 45 | 55 | 65 | 35 | 45 | 55 | 65 | 35 | 45 | 55 |
| M | 5 | 6 | 7 | 8 | 10 | 11 | 12 | 13 | 15 | 16 | 17 | 18 | 20 | 21 | 22 |
| N | 12 | 14 | 16 | 18 | 22 | 24 | 26 | 28 | 32 | 34 | 36 | 38 | 42 | 44 | 46 |
| KG | 2.86 | 3.09 | 3.31 | 3.54 | 3.77 | 3.99 | 4.22 | 4.44 | 4.67 | 4.90 | 5.12 | 5.35 | 5.57 | 5.80 | 5.99 |

# GETH6M
## Single Axis
## Ball Screw Driven



Maximum Stroke 800 mm | Maximum Speed 500 mm/s | Motor Output 100W | Ball Screw Ø12 mm | Linear Guide 9.5X42-1Pc

## Ordering Method

GETH6M - L 5 - 100 - BC - M10B - C 4 - M5 - 0001

Model

Special Order No.

**Ball Screw**

| | |
|---|---|
| L | Standard-MIT |

**Stroke**

| |
|---|
| 100-800 mm<br>50 Pitch |

**Installation Hole**

| | |
|---|---|
| Install on Bottom | M5 |
| Install on Internal | - |

**Ball Screw Lead**

| | |
|---|---|
| 02 | 02 mm |
| 05 | 05 mm |
| 10 | 10 mm |

**Motor Position**

| | |
|---|---|
| BC | In-Line Motor |
| BM | Motor at Bottom |
| BR | Motor on Right Side |
| BL | Motor on Left Side |

**Motor Brand , Power Output**

| | | | | |
|---|---|---|---|---|
| M | Mitsubishi | 10 | 100W | B※ |
| P | Panasonic | 20 | - | |
| Y | Yaskawa | 40 | - | |
| T | Delta | 75 | - | |

※" B " means with brake.
" - " means not applicable.

**Home Sensor**

| | |
|---|---|
| Extrnal | |
| C | Motor Side |
| D | Opposite Motor Side |
| Without Sensor | |
| E | Without Sensor |

**Limit Sensor**

| | |
|---|---|
| Extrnal | |
| 3 | 1 Pc |
| 4 | 2 Pc |
| Without Sensor | |
| 5 | Without Sensor |



Motorized X-Axis ▶ Ball Screw Driven ▶ Linear Drive
GMT GLOBAL INC.
GETH6M
GETH Specifications Introduction

## Specifications

| | | | | | |
|---|---|---|---|---|---|
| Performance | Repeatability (mm) | | ±0.01 | | |
| | Lead (mm) | | 2 | 5 | 10 |
| | Maximum Speed (mm / s) | | 100 | 250 | 500 |
| | Maximum Load | Horizontal (kg) | 30 | 30 | 15 |
| | | Vertical (kg) | 15 | 10 | 5 |
| | Rated Thrust (N) | | 854 | 341 | 170 |
| | Stroke / Pitch (mm) | | 100-800 mm / 50 mm Pitch | | |
| Parts | Ball Screw Precision & Ø (mm) | | C7Ø12 | | |
| | High Rigidity Linear Guide (mm) | | 9.5X42 | | |
| | Coupling (mm) | | 7X8 | | |
| | Home Sensor | External | EE-SX672 (NPN) | | |

※Shaft runout will occur when the stroke is over 600mm, deceleration will be the best solution to execute at that moment.

## Sensor Circuit Diagram

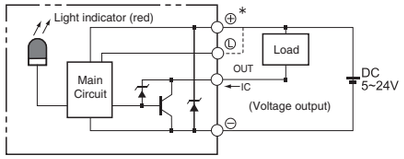


## Allowable Overhang (N.m)

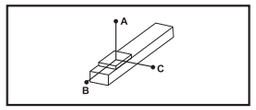


(Unit:mm)

| Horizontal Installation | | A | B | C |
|---|---|---|---|---|
| Lead2 | 10 kg | 898 | 34 | 120 |
| | 30 kg | 350 | 0 | 27 |
| Lead5 | 10 kg | 374 | 33 | 109 |
| | 30 kg | 159 | 0 | 25 |
| | - | - | - | - |
| Lead 10 | 3 kg | 624 | 125 | 335 |
| | 8 kg | 273 | 41 | 121 |
| | 15 kg | 216 | 24 | 77 |

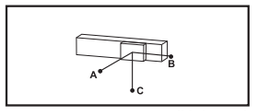


(Unit:mm)

| Wall Installation | | A | B | C |
|---|---|---|---|---|
| Lead2 | 15 kg | 25 | 0 | 110 |
| | 30 kg | 0 | 0 | 0 |
| Lead5 | 5 kg | 204 | 45 | 530 |
| | 10 kg | 72 | 0 | 245 |
| | 30 kg | 0 | 0 | 0 |
| Lead 10 | 3 kg | 293 | 96 | 510 |
| | 8 kg | 89 | 14 | 210 |
| | 15 kg | 43 | 0 | 130 |

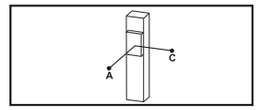


(Unit:mm)

| Vertical Installation | | A | C |
|---|---|---|---|
| Lead2 | 5 kg | 58 | 58 |
| | 15 kg | 0 | 0 |
| Lead5 | 2 kg | 171 | 172 |
| | 4 kg | 73 | 74 |
| | 10 kg | 23 | 26 |
| Lead 10 | 1 kg | 355 | 352 |
| | 2 kg | 165 | 165 |
| | 5 kg | 70 | 72 |

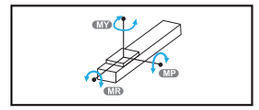


(Unit:N.m)

| Static Loading Moment | |
|---|---|
| MY | 70 |
| MP | 80 |
| MR | 75 |

## Servo Motor Options

| Brand | Mark | Brake | Motor Output | AC-Voltage | Motor Model | Driver Model |
|---|---|---|---|---|---|---|
| Mitsubishi | M | Without Brake (Horizontal Type) | 100 | 220 | HF-KP13 | MR-J3-10A |
| | | With Brake (Vertical Type) | 100 | 220 | HF-KP13B | MR-J3-10A |
| Panasonic | P | Without Brake (Horizontal Type) | 100 | 220 | MSMD012P1S | MADDT1205 |
| | | With Brake (Vertical Type) | 100 | 220 | MSMD012P1T | MADDT1205 |
| Delta | T | Without Brake (Horizontal Type) | 100 | 220 | ECMA-C20401ES | ASD-B20121-B |
| | | With Brake (Vertical Type) | 100 | 220 | ECMA-C20401FS | ASD-B20121-B |

# GETH6M
## Single Axis
## In-Line Motor / Motor at Bottom

### BC In-Line Motor

2D CAD 3D CAD CAD Download : www.gmtlinear.com (Unit:mm)

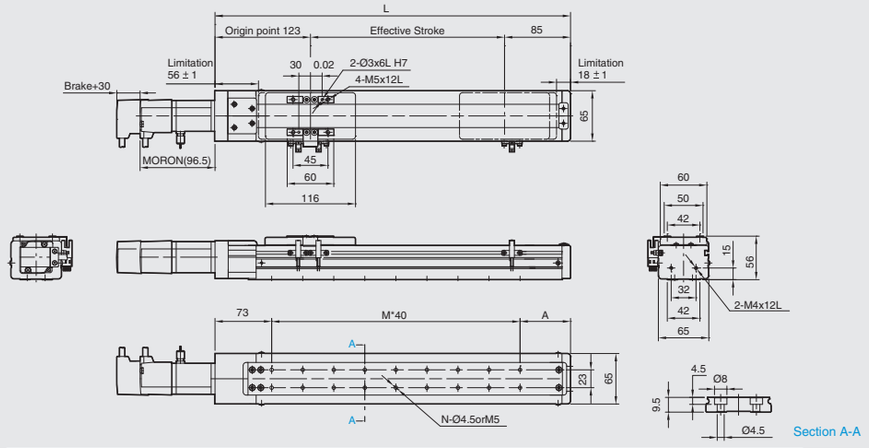


| Stroke | 100 | 150 | 200 | 250 | 300 | 350 | 400 | 450 | 500 | 550 | 600 | 650 | 700 | 750 | 800 |
|---|---|---|---|---|---|---|---|---|---|---|---|---|---|---|---|
| L | 308 | 358 | 408 | 458 | 508 | 558 | 608 | 658 | 708 | 758 | 808 | 858 | 908 | 958 | 1008 |
| A | 35 | 45 | 55 | 65 | 35 | 45 | 55 | 65 | 35 | 45 | 55 | 65 | 35 | 45 | 55 |
| M | 5 | 6 | 7 | 8 | 10 | 11 | 12 | 13 | 15 | 16 | 17 | 18 | 20 | 21 | 22 |
| N | 12 | 14 | 16 | 18 | 22 | 24 | 26 | 28 | 32 | 34 | 36 | 38 | 42 | 44 | 46 |
| KG | 2.82 | 3.05 | 3.27 | 3.5 | 3.72 | 3.94 | 4.17 | 4.39 | 4.62 | 4.84 | 5.06 | 5.29 | 5.51 | 5.74 | 5.94 |

### BM Motor at Bottom

2D CAD 3D CAD CAD Download : www.gmtlinear.com (Unit:mm)

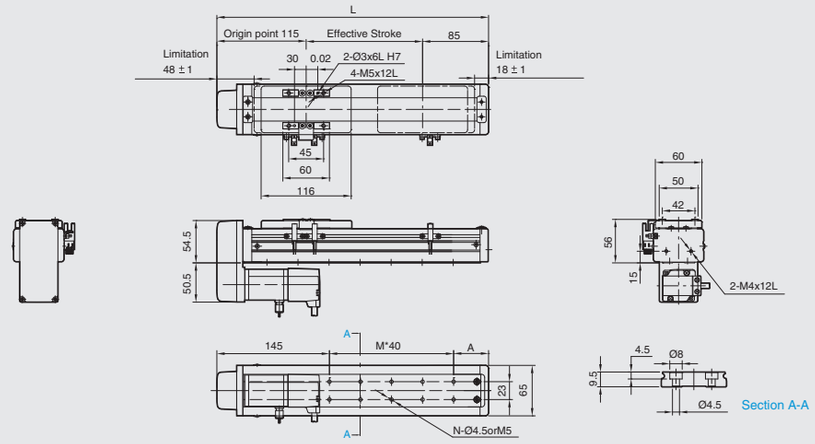


| Stroke | 100 | 150 | 200 | 250 | 300 | 350 | 400 | 450 | 500 | 550 | 600 | 650 | 700 | 750 | 800 |
|---|---|---|---|---|---|---|---|---|---|---|---|---|---|---|---|
| L | 300 | 350 | 400 | 450 | 500 | 550 | 600 | 650 | 700 | 750 | 800 | 850 | 900 | 950 | 1000 |
| A | 35 | 45 | 55 | 65 | 35 | 45 | 55 | 65 | 35 | 45 | 55 | 65 | 35 | 45 | 55 |
| M | 3 | 4 | 5 | 6 | 8 | 9 | 10 | 11 | 13 | 14 | 15 | 16 | 18 | 19 | 20 |
| N | 8 | 10 | 12 | 14 | 18 | 20 | 22 | 24 | 28 | 30 | 32 | 34 | 38 | 40 | 42 |
| KG | 2.86 | 3.09 | 3.31 | 3.54 | 3.77 | 3.99 | 4.22 | 4.44 | 4.67 | 4.90 | 5.12 | 5.35 | 5.57 | 5.80 | 5.99 |





# GETH6M
## Single Axis
## Motor on Left Side / Motor on Right Side

### BL on Left Side

2D CAD 3D CAD CAD Download : www.gmtlinear.com (Unit:mm)

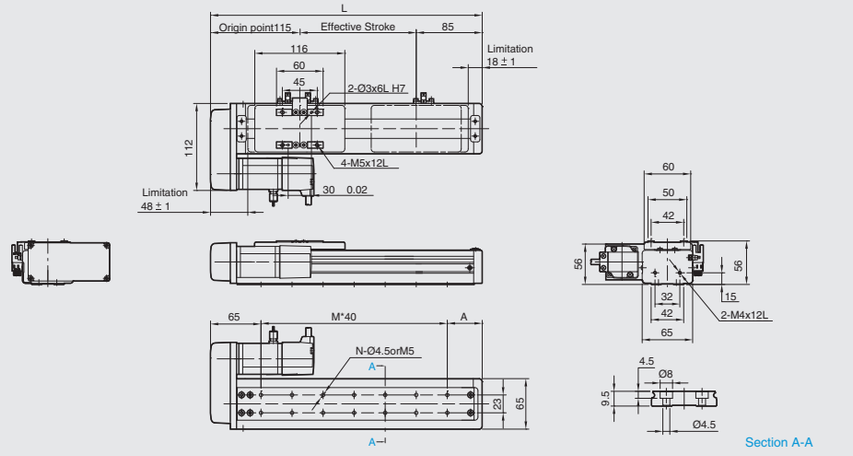


| Stroke | 100 | 150 | 200 | 250 | 300 | 350 | 400 | 450 | 500 | 550 | 600 | 650 | 700 | 750 | 800 |
|---|---|---|---|---|---|---|---|---|---|---|---|---|---|---|---|
| L | 300 | 350 | 400 | 450 | 500 | 550 | 600 | 650 | 700 | 750 | 800 | 850 | 900 | 950 | 1000 |
| A | 35 | 45 | 55 | 65 | 35 | 45 | 55 | 65 | 35 | 45 | 55 | 65 | 35 | 45 | 55 |
| M | 5 | 6 | 7 | 8 | 10 | 11 | 12 | 13 | 15 | 16 | 17 | 18 | 20 | 21 | 22 |
| N | 12 | 14 | 16 | 18 | 22 | 24 | 26 | 28 | 32 | 34 | 36 | 38 | 42 | 44 | 46 |
| KG | 2.86 | 3.09 | 3.31 | 3.54 | 3.77 | 3.99 | 4.22 | 4.44 | 4.67 | 4.90 | 5.12 | 5.35 | 5.57 | 5.80 | 5.99 |

### BR Motor on Right Side

2D CAD 3D CAD CAD Download : www.gmtlinear.com (Unit:mm)

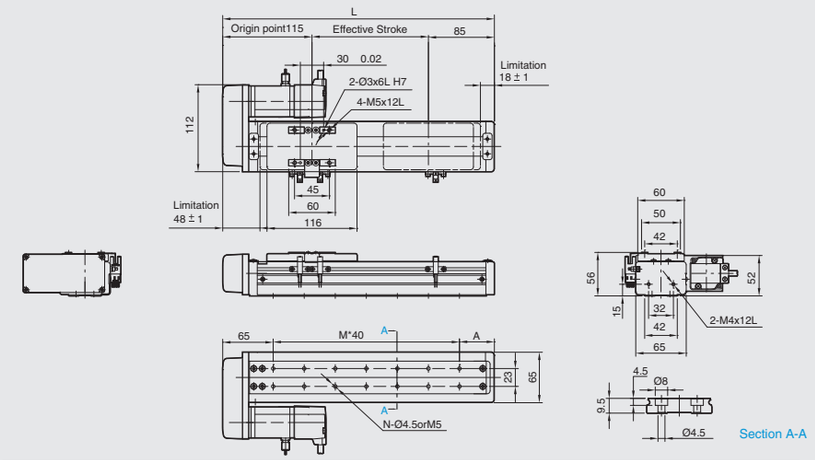


| Stroke | 100 | 150 | 200 | 250 | 300 | 350 | 400 | 450 | 500 | 550 | 600 | 650 | 700 | 750 | 800 |
|---|---|---|---|---|---|---|---|---|---|---|---|---|---|---|---|
| L | 300 | 350 | 400 | 450 | 500 | 550 | 600 | 650 | 700 | 750 | 800 | 850 | 900 | 950 | 1000 |
| A | 35 | 45 | 55 | 65 | 35 | 45 | 55 | 65 | 35 | 45 | 55 | 65 | 35 | 45 | 55 |
| M | 5 | 6 | 7 | 8 | 10 | 11 | 12 | 13 | 15 | 16 | 17 | 18 | 20 | 21 | 22 |
| N | 12 | 14 | 16 | 18 | 22 | 24 | 26 | 28 | 32 | 34 | 36 | 38 | 42 | 44 | 46 |
| KG | 2.86 | 3.09 | 3.31 | 3.54 | 3.77 | 3.99 | 4.22 | 4.44 | 4.67 | 4.90 | 5.12 | 5.35 | 5.57 | 5.80 | 5.99 |

# GETH10
## Single Axis
## Ball Screw Driven

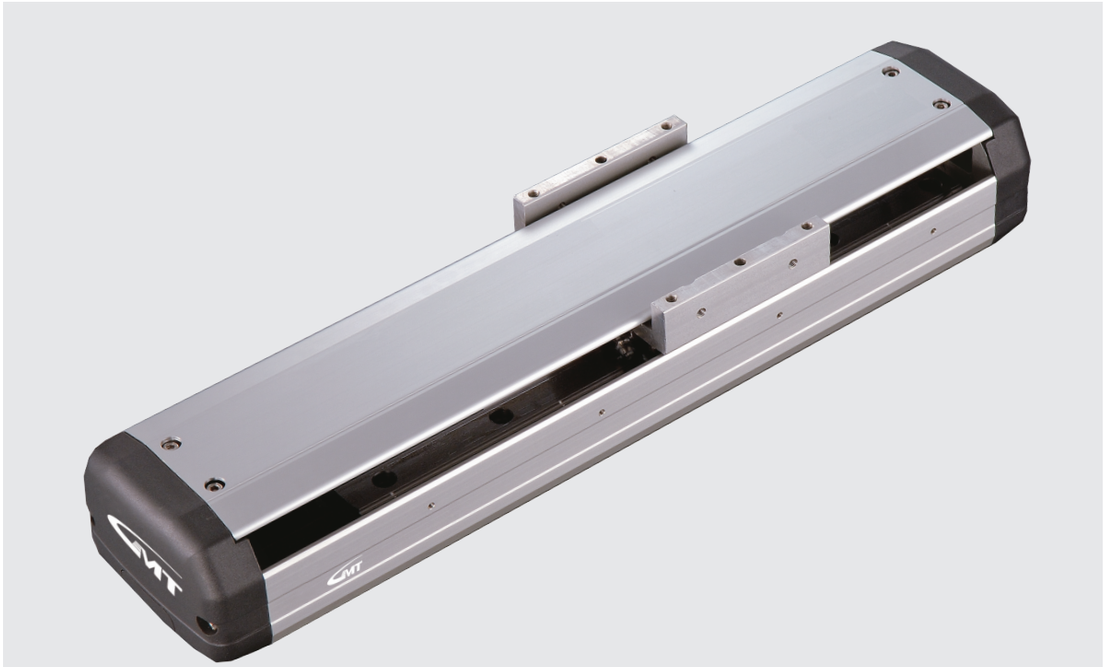

Maximum Stroke 1000 mm | Maximum Speed 1000 mm/s | Motor Output 100W | Ball Screw Ø16 mm | Linear Guide 20X18-1Pc

## Ordering Method

GETH10 - L 5 - 100 - BC - M10B - C 4 - 0001

Model

Special Order No.

**Ball Screw**

| | |
|---|---|
| L | Standard-MIT |

**Stroke**

100-1050 mm
50 Pitch

**Ball Screw Lead**

| | |
|---|---|
| 05 | 05 mm |
| 10 | 10 mm |
| 16 | 16 mm |
| 20 | 20 mm |

**Motor Position**

| | |
|---|---|
| M | In-Line Motor Built-In |
| BC | In-Line Motor |
| BM | Motor at Bottom |
| BR | Motor on Right Side |
| BL | Motor on Left Side |

**Motor Brand , Power Output**

| | | | | |
|---|---|---|---|---|
| M | Mitsubishi | 10 | 100W | B※ |
| P | Panasonic | 20 | - | |
| Y | Yaskawa | 40 | - | |
| T | Delta | 75 | - | |

※" B "means with brake.
" - "means not applicable.

**Home Sensor**

| | |
|---|---|
| Internal | |
| A | Motor Side |
| B | Opposite Motor Side |
| External | |
| C | Motor Side |
| D | Opposite Motor Side |
| Without Sensor | |
| E | Withoue Sensor |

**Limit Sensor**

| | |
|---|---|
| Internal | |
| 1 | 1 Pc |
| 2 | 2 Pc |
| External | |
| 3 | 1 Pc |
| 4 | 2 Pc |
| Without Sensor | |
| 5 | Without Sensor |



GMT GLOBAL INC.
Motorized X-Axis ▶ Ball Screw Driven ▶ Linear Drive
GETH10
GETH Specifications Introduction

## Specifications

| | | | | | |
|---|---|---|---|---|---|
| Performance | Repeatability (mm) | | ±0.01 | | |
| | Lead (mm) | | 5 | 10 | 16 | 20 |
| | Maximum Load (mm / s) | | 250 | 500 | 800 | 1000 |
| | Maximum Load | Horizontal (kg) | 50 | 30 | 22 | 18 |
| | | Vertical (kg) | 12 | 8 | 5 | 3 |
| | Rated Thrust (N) | | 341 | 170 | 106 | 85 |
| | Stroke / Pitch (mm) | | 100-1050 mm / 50 mm Pitch | | | |
| Parts | AC Servo Motor Output (W) | | 100 | | | |
| | Ball Screw Ø (mm) | | C7Ø16 | | | |
| | High Rigidity Linear Guide (mm) | | 20X18 | | | |
| | Coupling (mm) | | 8X10 | | | |
| | Home Sensor | External | EE-SX672 (NPN) | | | |
| | | Built-In | EE-SX674 (NPN) | | | |

※Shaft runout will occur when the stroke is over 750mm, deceleration will be the best solution to execute at that moment.

## Sensor Circuit Diagram

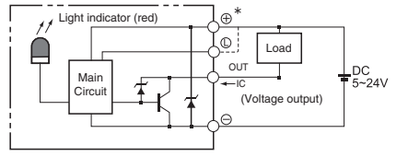


## Allowable Overhang (N.m)

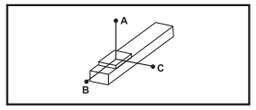


(Unit:mm)

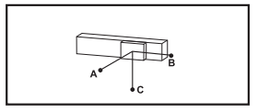


(Unit:mm)

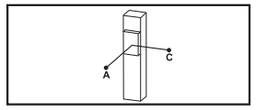


(Unit:mm)

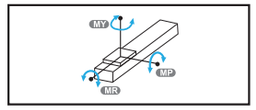


(Unit:N.m)

| Horizontal Installation | | A | B | C |
|---|---|---|---|---|
| Lead2 | 30kg | 424 | 24 | 25 |
| | 50kg | 0 | 0 | 0 |
| | - | - | - | - |
| Lead5 | 15kg | 394 | 76 | 79 |
| | 25kg | 184 | 22 | 25 |
| | 30kg | 111 | - | - |
| Lead 10 | 5kg | 937 | 282 | 259 |
| | 10kg | 487 | 121 | 116 |
| | 22kg | 236 | 40 | 44 |
| Lead 20 | 5kg | 940 | 285 | 264 |
| | 10kg | 490 | 125 | 120 |
| | 15kg | 240 | 45 | 48 |

| Wall Installation | | A | B | C |
|---|---|---|---|---|
| Lead2 | 10kg | 105 | 50 | 1400 |
| | 20kg | 22 | 0 | 538 |
| | 30kg | 0 | 0 | 0 |
| Lead5 | 10kg | 100 | 50 | 545 |
| | 20kg | 20 | 0 | 221 |
| | 30kg | 0 | 0 | 0 |
| Lead 10 | 5kg | 116 | 58 | 605 |
| | 10kg | 24 | 0 | 253 |
| | 22kg | 0 | 0 | 0 |
| Lead 20 | 5kg | 251 | 211 | 903 |
| | 10kg | 97 | 49 | 436 |
| | 15kg | 23 | 0 | 153 |

| Vertical Installation | | A | C |
|---|---|---|---|
| Lead2 | 5kg | 100 | 145 |
| | 10kg | 50 | 90 |
| | 12kg | 23 | 63 |
| Lead5 | 4kg | 335 | 375 |
| | 6kg | 140 | 180 |
| | 8kg | 100 | 140 |
| Lead 10 | 1kg | 620 | 620 |
| | 2kg | 680 | 680 |
| | 5kg | 310 | 350 |
| Lead 20 | 1kg | 580 | 580 |
| | 2kg | 645 | 645 |
| | 3kg | 310 | 350 |

| Static Loading Moment | |
|---|---|
| MY | 110 |
| MP | 110 |
| MR | 120 |

## Servo Motor Options

| Brand | Mark | Brake | Motor Output | AC-Voltage | Motor Model | Driver Model |
|---|---|---|---|---|---|---|
| Mitsubishi | M | Without Brake (Horizontal Type) | 100 | 220 | HF-KP13 | MR-J3-10A |
| | | With Brake (Vertical Type) | 100 | 220 | HF-KP13B | MR-J3-10A |
| Panasonic | P | Without Brake (Horizontal Type) | 100 | 220 | MSMD012P1S | MADDT1205 |
| | | With Brake (Vertical Type) | 100 | 220 | MSMD012P1T | MADDT1205 |
| Delta | T | Without Brake (Horizontal Type) | 100 | 220 | ECMA-C20401ES | ASD-B20121-B |
| | | With Brake (Vertical Type) | 100 | 220 | ECMA-C20401FS | ASD-B20121-B |

# GETH10
## Single Axis
## Ball Screw Driven

### BC In-Line Motor

2D CAD 3D CAD • CAD Download : www.gmtlinear.com •

(Unit:mm)

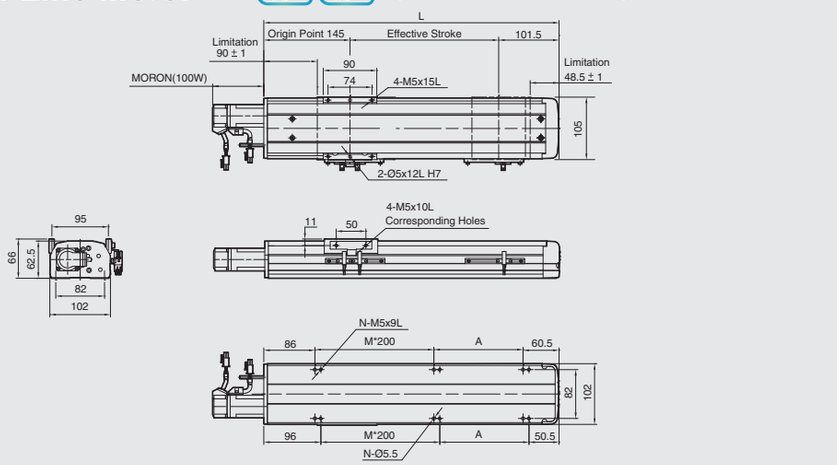


| Stroke | 100 | 150 | 200 | 250 | 300 | 350 | 400 | 450 | 500 | 550 | 600 | 650 | 700 | 750 | 800 | 850 | 900 | 950 | 1000 | 1050 |
|---|---|---|---|---|---|---|---|---|---|---|---|---|---|---|---|---|---|---|---|---|
| L | 346.5 | 396.5 | 446.5 | 496.5 | 546.5 | 596.5 | 646.5 | 696.5 | 746.5 | 796.5 | 846.5 | 896.5 | 946.5 | 996.5 | 1046.5 | 1096.5 | 1146.5 | 1196.5 | 1246.5 | 1296.5 |
| A | 200 | 50 | 100 | 150 | 200 | 50 | 100 | 150 | 200 | 50 | 100 | 150 | 200 | 50 | 100 | 150 | 200 | 50 | 100 | 150 |
| M | 0 | 1 | 1 | 1 | 1 | 2 | 2 | 2 | 2 | 3 | 3 | 3 | 3 | 4 | 4 | 4 | 5 | 5 | 5 | 5 |
| N | 4 | 6 | 6 | 6 | 6 | 8 | 8 | 8 | 8 | 10 | 10 | 10 | 10 | 12 | 12 | 12 | 12 | 14 | 14 | 14 |
| KG | 4.64 | 5.02 | 5.41 | 5.79 | 6.18 | 6.56 | 6.95 | 7.33 | 7.72 | 8.10 | 8.49 | 8.87 | 9.26 | 9.64 | 10.03 | 10.41 | 10.80 | 11.18 | 11.57 | 11.95 |

### M In-Line Motor Built-In

2D CAD 3D CAD • CAD Download : www.gmtlinear.com •

(Unit:mm)

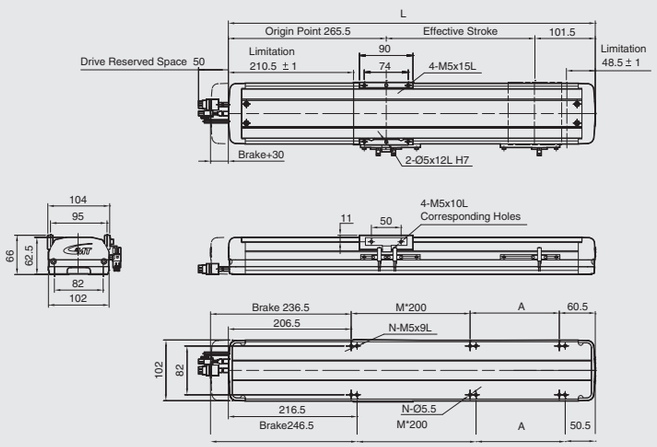


| Stroke | 100 | 150 | 200 | 250 | 300 | 350 | 400 | 450 | 500 | 550 | 600 | 650 | 700 | 750 | 800 | 850 | 900 | 950 | 1000 | 1050 |
|---|---|---|---|---|---|---|---|---|---|---|---|---|---|---|---|---|---|---|---|---|
| L | 467 | 517 | 567 | 617 | 667 | 717 | 767 | 817 | 867 | 917 | 967 | 1017 | 1067 | 1117 | 1167 | 1217 | 1267 | 1317 | 1367 | 1417 |
| A | 200 | 50 | 100 | 150 | 200 | 50 | 100 | 150 | 200 | 50 | 100 | 150 | 200 | 50 | 100 | 150 | 200 | 50 | 100 | 150 |
| M | 0 | 1 | 1 | 1 | 1 | 2 | 2 | 2 | 2 | 3 | 3 | 3 | 3 | 4 | 4 | 4 | 4 | 5 | 5 | 5 |
| N | 4 | 6 | 6 | 6 | 6 | 8 | 8 | 8 | 8 | 10 | 10 | 10 | 10 | 12 | 12 | 12 | 12 | 14 | 14 | 14 |
| KG | 4.98 | 5.36 | 5.75 | 6.13 | 6.52 | 6.9 | 7.29 | 7.67 | 8.06 | 8.44 | 8.83 | 9.21 | 9.60 | 9.98 | 10.37 | 10.75 | 11.14 | 11.52 | 11.91 | 12.29 |





# GETH10
## Single Axis
## Motor on Left Side / Motor on Right Side

### BL Motor on Left Side

2D CAD 3D CAD • CAD Download : www.gmtlinear.com •

(Unit:mm)

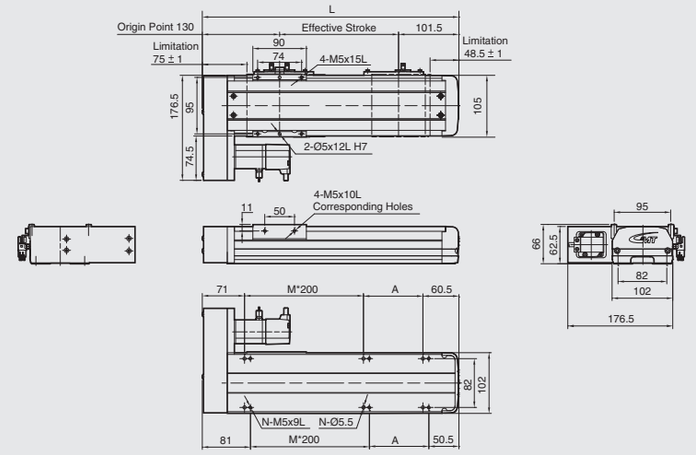


| Stroke | 100 | 150 | 200 | 250 | 300 | 350 | 400 | 450 | 500 | 550 | 600 | 650 | 700 | 750 | 800 | 850 | 900 | 950 | 1000 | 1050 |
|---|---|---|---|---|---|---|---|---|---|---|---|---|---|---|---|---|---|---|---|---|
| L | 331.5 | 381.5 | 431.5 | 481.5 | 531.5 | 581.5 | 631.5 | 681.5 | 731.5 | 781.5 | 831.5 | 881.5 | 931.5 | 981.5 | 1031.5 | 1081.5 | 1131.5 | 1181.5 | 1231.5 | 1281.5 |
| A | 200 | 50 | 100 | 150 | 200 | 50 | 100 | 150 | 200 | 50 | 100 | 150 | 200 | 50 | 100 | 150 | 200 | 50 | 100 | 150 |
| M | 0 | 1 | 1 | 1 | 1 | 2 | 2 | 2 | 2 | 3 | 3 | 3 | 3 | 4 | 4 | 4 | 4 | 5 | 5 | 5 |
| N | 4 | 6 | 6 | 6 | 6 | 8 | 8 | 8 | 8 | 10 | 10 | 10 | 10 | 12 | 12 | 12 | 12 | 14 | 14 | 14 |
| KG | 4.86 | 5.25 | 5.63 | 6.02 | 6.4 | 6.79 | 7.17 | 7.56 | 7.94 | 8.33 | 8.71 | 9.1 | 9.48 | 9.87 | 10.25 | 10.64 | 11.02 | 11.41 | 11.79 | 12.18 |

### BR Motor on Right Side

2D CAD 3D CAD • CAD Download : www.gmtlinear.com •

(Unit:mm)

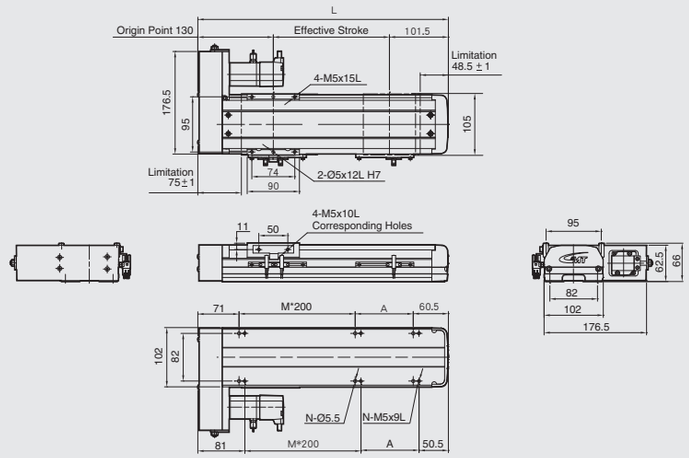


| Stroke | 100 | 150 | 200 | 250 | 300 | 350 | 400 | 450 | 500 | 550 | 600 | 650 | 700 | 750 | 800 | 850 | 900 | 950 | 1000 | 1050 |
|---|---|---|---|---|---|---|---|---|---|---|---|---|---|---|---|---|---|---|---|---|
| L | 331.5 | 381.5 | 431.5 | 481.5 | 531.5 | 581.5 | 631.5 | 681.5 | 731.5 | 781.5 | 831.5 | 881.5 | 931.5 | 981.5 | 1031.5 | 1081.5 | 1131.5 | 1181.5 | 1231.5 | 1281.5 |
| A | 200 | 50 | 100 | 150 | 200 | 50 | 100 | 150 | 200 | 50 | 100 | 150 | 200 | 50 | 100 | 150 | 200 | 50 | 100 | 150 |
| M | 0 | 1 | 1 | 1 | 1 | 2 | 2 | 2 | 2 | 3 | 3 | 3 | 3 | 4 | 4 | 4 | 4 | 5 | 5 | 5 |
| N | 4 | 6 | 6 | 6 | 6 | 8 | 8 | 8 | 8 | 10 | 10 | 10 | 10 | 12 | 12 | 12 | 12 | 14 | 14 | 14 |
| KG | 4.86 | 5.25 | 5.63 | 6.02 | 6.4 | 6.79 | 7.17 | 7.56 | 7.94 | 8.33 | 8.71 | 9.1 | 9.48 | 9.87 | 10.25 | 10.64 | 11.02 | 11.41 | 11.79 | 12.18 |

# GETH10
## Single Axis
## Motor at Bottom

### BM Motor at Bottom

2D CAD 3D CAD • CAD Download : www.gmtlinear.com •

(Unit:mm)

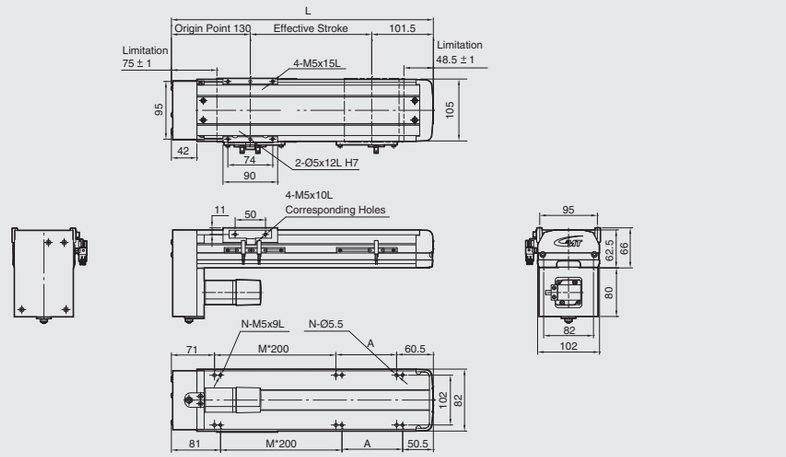


| Stroke | 100 | 150 | 200 | 250 | 300 | 350 | 400 | 450 | 500 | 550 | 600 | 650 | 700 | 750 | 800 | 850 | 900 | 950 | 1000 | 1050 |
|---|---|---|---|---|---|---|---|---|---|---|---|---|---|---|---|---|---|---|---|---|
| L | 331.5 | 381.5 | 431.5 | 481.5 | 531.5 | 581.5 | 631.5 | 681.5 | 731.5 | 781.5 | 831.5 | 881.5 | 931.5 | 981.5 | 1031.5 | 1081.5 | 1131.5 | 1181.5 | 1231.5 | 1281.5 |
| A | 200 | 50 | 100 | 150 | 200 | 50 | 100 | 150 | 200 | 50 | 100 | 150 | 200 | 50 | 100 | 150 | 200 | 50 | 100 | 150 |
| M | 0 | 1 | 1 | 1 | 1 | 2 | 2 | 2 | 2 | 3 | 3 | 3 | 3 | 4 | 4 | 4 | 4 | 5 | 5 | 5 |
| N | 4 | 6 | 6 | 6 | 6 | 8 | 8 | 8 | 8 | 10 | 10 | 10 | 10 | 12 | 12 | 12 | 12 | 14 | 14 | 14 |
| KG | 4.86 | 5.25 | 5.63 | 6.02 | 6.4 | 6.79 | 7.17 | 7.56 | 7.94 | 8.33 | 8.71 | 9.1 | 9.48 | 9.87 | 10.25 | 10.64 | 11.02 | 11.41 | 11.79 | 12.18 |

# GETH12
## Single Axis
## Ball Screw Driven

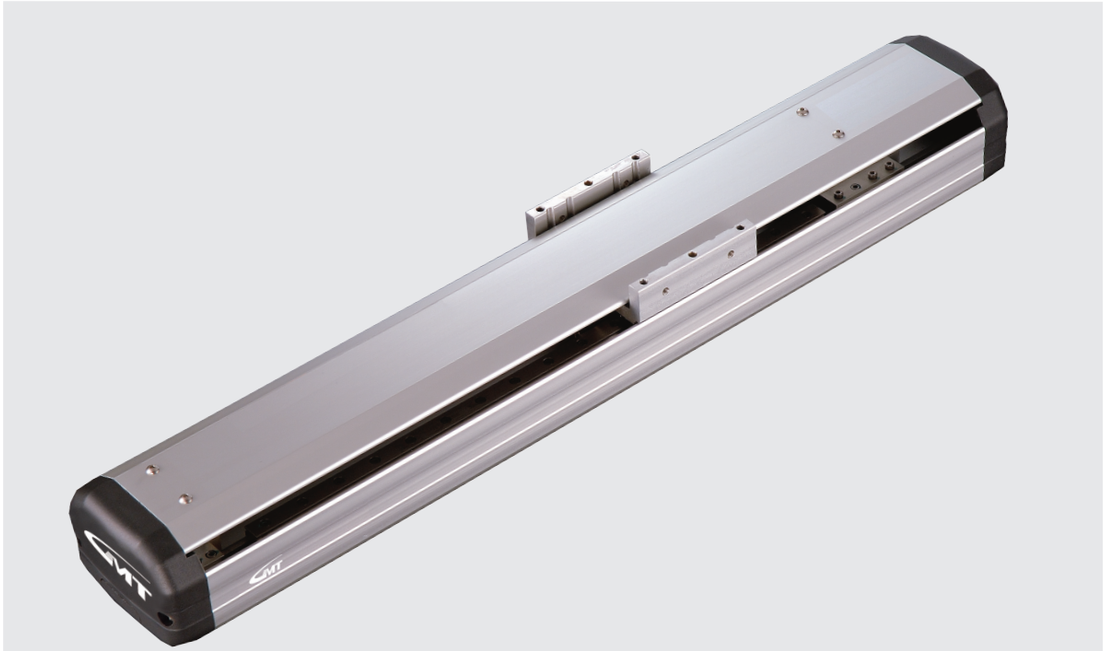

Maximum Stroke 1050 mm | Maximum Speed 1000 mm/s | Motor Output 100W | Ball Screw Ø16 mm | Linear Guide 12X7.5-2 Pc

## Ordering Method

GETH12 - L 16 - 100 - M - M10B - C 4 - 0001

Model

Special Order No.

**Ball Screw**

| | |
|---|---|
| L | Standard-MIT |

**Stroke**

100-1050 mm
50 Pitch

**Ball Screw Lead**

| | |
|---|---|
| 05 | 05 mm |
| 10 | 10 mm |
| 16 | 16 mm |
| 20 | 20 mm |

**Motor Position**

| | |
|---|---|
| M | In-Line Motor Built-In |
| BC | In-Line Motor |
| BM | Motor at Bottom |
| BR | Motor on Right Side |
| BL | Motor on Left Side |

**Motor Brand , Power Output**

| | | | | |
|---|---|---|---|---|
| M | Mitsubishi | 10 | 100W | B※ |
| P | Panasonic | 20 | - | |
| Y | Yaskawa | 40 | - | |
| T | Delta | 75 | - | |

※" B " means with brake.
" - " means not applicable.

**Home Sensor**

| | |
|---|---|
| Internal | |
| A | Motor Side |
| B | Opposite Motor Side |
| External | |
| C | Motor Side |
| D | Opposite Motor Side |
| Without Sensor | |
| E | Without Sensor |

**Limit Sensor**

| | |
|---|---|
| Internal | |
| 1 | 1 Pc |
| 2 | 2 Pc |
| External | |
| 3 | 1 Pc |
| 4 | 2 Pc |
| Without Sensor | |
| 5 | Without Sensor |



Motorized X-Axis ▶ Ball Screw Driven ▶ Linear Drive
GETH12
GMT GLOBAL INC.
GETH Specifications Introduction

## Specifications

| | | | | | | |
|---|---|---|---|---|---|---|
| Performance | Repeatability (mm) | | ±0.01 | | | |
| | Lead (mm) | | 5 | 10 | 16 | 20 |
| | Maximum Speed (mm / s) | | 250 | 500 | 800 | 1000 |
| | Maximum Load | Horizontal (kg) | 50 | 30 | 22 | 18 |
| | | Vertical (kg) | 12 | 8 | 5 | 3 |
| | Rated Thrust (N) | | 341 | 170 | 106 | 85 |
| | Stroke / Pitch (mm) | | 100-1050 mm / 50 mm Pitch | | | |
| Part | AC Servo Motor Output (W) | | 100 | | | |
| | Ball Screw Ø (mm) | | C7Ø16 | | | |
| | High Rigidity Linear Guide (mm) | | 12X7.5 | | | |
| | Coupling (mm) | | 8X10 | | | |
| | Home Sensor | External | EE-SX672 (NPN) | | | |
| | | Built-In | EE-SX674 (NPN) | | | |

※Shaft runout will occur when the stroke is over 750mm, deceleration will be the best solution to execute at that moment.

## Sensor Circuit Diagram

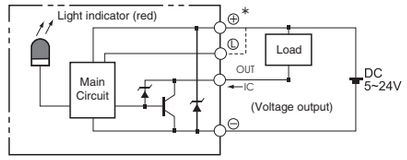


## Allowable Overhang (N.m)

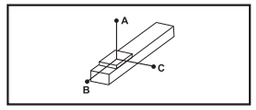


(Unit:mm)

| Horizontal Installation | | A | B | C |
|---|---|---|---|---|
| Lead5 | 30 kg | 1200 | 158 | 311 |
| | 50 kg | 1100 | 124 | 124 |
| | - | - | - | - |
| Lead 10 | 15 kg | 1000 | 190 | 250 |
| | 25 kg | 900 | 190 | 170 |
| | 30 kg | 850 | 124 | 122 |
| Lead 16 | 5 kg | 2150 | 1365 | 982 |
| | 10 kg | 1190 | 462 | 427 |
| | 22 kg | 1270 | 242 | 291 |
| Lead 20 | 5 kg | 1936 | 1229 | 882 |
| | 10 kg | 1039 | 418 | 387 |
| | 15 kg | 1073 | 220 | 264 |

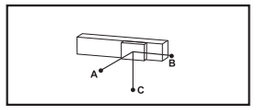


(Unit:mm)

| Wall Installation | | A | B | C |
|---|---|---|---|---|
| Lead5 | 10kg | 126 | 60 | 800 |
| | 20kg | 70 | 30 | 600 |
| | 30kg | 50 | 15 | 476 |
| Lead 10 | 10kg | 246 | 180 | 700 |
| | 20kg | 150 | 80 | 515 |
| | 30kg | 72 | 32 | 422 |
| Lead 16 | 5kg | 1068 | 976 | 1579 |
| | 10kg | 405 | 278 | 776 |
| | 22kg | 220 | 107 | 680 |
| Lead 20 | 5kg | 958 | 875 | 1420 |
| | 10kg | 361 | 248 | 696 |
| | 15kg | 107 | 95 | 610 |

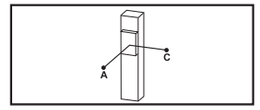


(Unit:mm)

| Vertical Installation | | A | C |
|---|---|---|---|
| Lead5 | 5kg | 412 | 398 |
| | 10kg | 394 | 356 |
| | 12kg | 357 | 355 |
| Lead 10 | 4kg | 711 | 578 |
| | 6kg | 534 | 414 |
| | 8kg | 411 | 376 |
| Lead 16 | 1kg | 1210 | 1210 |
| | 2kg | 1174 | 1174 |
| | 5kg | 650 | 650 |
| Lead 20 | - | - | - |
| | - | - | - |
| | 3kg | 1030 | 802 |

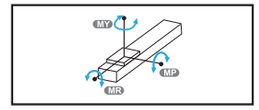


(Unit:N.m)

| Static Loading Moment | |
|---|---|
| MY | 150 |
| MP | 150 |
| MR | 130 |

## Servo Motor Options

| Brand | Mark | Brake | Motor Output | AC-Voltage | Motor Model | Driver Model |
|---|---|---|---|---|---|---|
| Tamagawa | M | Without Brake (Horizontal Type) | 100 | 220 | HF-KP13 | MR-J3-10A |
| | | With Brake (Vertical Type) | 100 | 220 | HF-KP13B | MR-J3-10A |
| Oriental motor | P | Without Brake (Horizontal Type) | 100 | 220 | MSMD012P1S | MADDT1205 |
| | | With Brake (Vertical Type) | 100 | 220 | MHMD012P1T | MADDT1205 |
| Sanyo Denki | T | Without Brake (Horizontal Type) | 100 | 220 | ECMA-C20401ES | ASD-B20121-B |
| | | With Brake (Vertical Type) | 100 | 220 | ECMA-C20401FS | ASD-B20121-B |

# GETH12
## Single Axis
## In-Line Motor / In-Line Motor Built-In

### BC In-ine Motor

2D CAD 3D CAD • CAD Download : www.gmtlinear.com •

(Unit:mm)

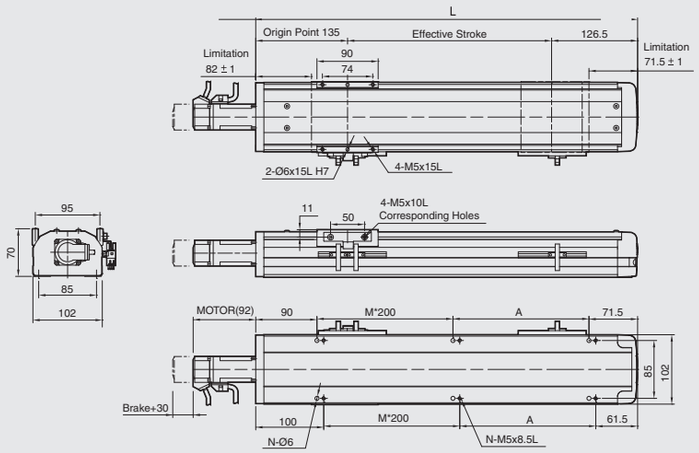


| Stroke | 100 | 150 | 200 | 250 | 300 | 350 | 400 | 450 | 500 | 550 | 600 | 650 | 700 | 750 | 800 | 850 | 900 | 950 | 1000 | 1050 |
|---|---|---|---|---|---|---|---|---|---|---|---|---|---|---|---|---|---|---|---|---|
| L | 361.5 | 411.5 | 461.5 | 511.5 | 561.5 | 611.5 | 661.5 | 711.5 | 761.5 | 811.5 | 861.5 | 911.5 | 961.5 | 1011.5 | 1061.5 | 1111.5 | 1161.5 | 1211.5 | 1261.5 | 1311.5 |
| A | 200 | 50 | 100 | 150 | 200 | 50 | 100 | 150 | 200 | 50 | 100 | 150 | 200 | 50 | 100 | 150 | 200 | 50 | 100 | 150 |
| M | 0 | 1 | 1 | 1 | 1 | 2 | 2 | 2 | 2 | 3 | 3 | 3 | 3 | 4 | 4 | 5 | 5 | 5 | 5 | 5 |
| N | 4 | 6 | 6 | 6 | 6 | 8 | 8 | 8 | 8 | 10 | 10 | 10 | 10 | 12 | 12 | 12 | 12 | 14 | 14 | 14 |
| KG | 5.07 | 5.46 | 5.84 | 6.23 | 6.62 | 7.01 | 7.4 | 7.78 | 8.17 | 8.56 | 8.95 | 9.34 | 9.72 | 10.11 | 10.5 | 10.89 | 11.28 | 11.66 | 12.05 | 12.44 |

### M In-Line Motor Built-In

2D CAD 3D CAD • CAD Download : www.gmtlinear.com •

(Unit:mm)

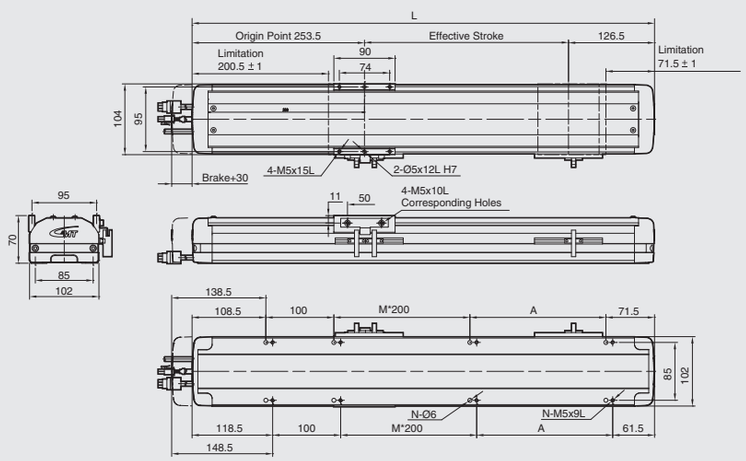


| Stroke | 100 | 150 | 200 | 250 | 300 | 350 | 400 | 450 | 500 | 550 | 600 | 650 | 700 | 750 | 800 | 850 | 900 | 950 | 1000 | 1050 |
|---|---|---|---|---|---|---|---|---|---|---|---|---|---|---|---|---|---|---|---|---|
| L | 480 | 530 | 580 | 630 | 680 | 730 | 780 | 830 | 880 | 930 | 980 | 1030 | 1080 | 1130 | 1180 | 1230 | 1280 | 1330 | 1380 | 1430 |
| A | 200 | 50 | 100 | 150 | 200 | 50 | 100 | 150 | 200 | 50 | 100 | 150 | 200 | 50 | 100 | 150 | 200 | 50 | 100 | 150 |
| M | 0 | 1 | 1 | 1 | 1 | 2 | 2 | 2 | 2 | 3 | 3 | 3 | 3 | 4 | 4 | 5 | 5 | 5 | 5 | 5 |
| N | 6 | 8 | 8 | 8 | 8 | 10 | 10 | 10 | 10 | 12 | 12 | 12 | 12 | 14 | 14 | 14 | 14 | 16 | 16 | 16 |
| KG | 5.54 | 5.93 | 6.32 | 6.71 | 7.1 | 7.49 | 7.88 | 8.27 | 8.66 | 9.05 | 9.44 | 9.83 | 10.22 | 10.61 | 11 | 11.39 | 11.78 | 12.17 | 12.56 | 12.95 |





# GETH12
## Single Axis
## Motor on Left Side / Motor on Right Side

### BL Motor on Left Side

2D CAD 3D CAD • CAD Download : www.gmtlinear.com •

(Unit:mm)

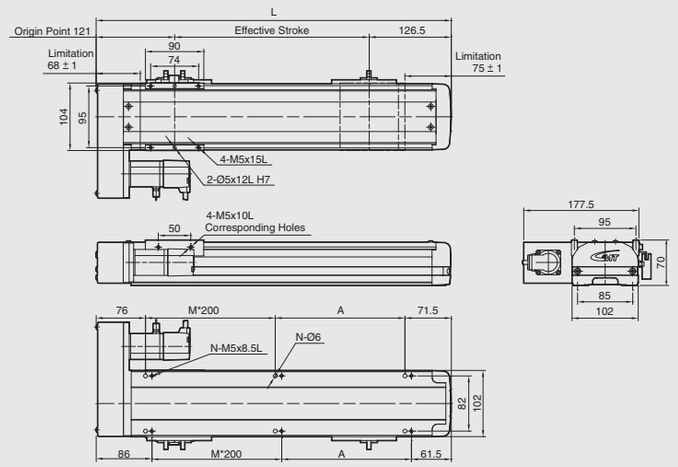


| Stroke | 100 | 150 | 200 | 250 | 300 | 350 | 400 | 450 | 500 | 550 | 600 | 650 | 700 | 750 | 800 | 850 | 900 | 950 | 1000 | 1050 |
|---|---|---|---|---|---|---|---|---|---|---|---|---|---|---|---|---|---|---|---|---|
| L | 347.5 | 397.5 | 447.5 | 497.5 | 547.5 | 597.5 | 647.5 | 697.5 | 747.5 | 797.5 | 847.5 | 897.5 | 947.5 | 997.5 | 1047.5 | 1097.5 | 1147.5 | 1197.5 | 1247.5 | 1297.5 |
| A | 200 | 50 | 100 | 150 | 200 | 50 | 100 | 150 | 200 | 50 | 100 | 150 | 200 | 50 | 100 | 150 | 200 | 50 | 100 | 150 |
| M | 0 | 1 | 1 | 1 | 1 | 2 | 2 | 2 | 2 | 3 | 3 | 3 | 3 | 4 | 4 | 4 | 4 | 5 | 5 | 5 |
| N | 4 | 6 | 6 | 6 | 6 | 8 | 8 | 8 | 8 | 10 | 10 | 10 | 10 | 12 | 12 | 12 | 12 | 14 | 14 | 14 |
| KG | 5.45 | 5.84 | 6.23 | 6.61 | 7 | 7.39 | 7.77 | 8.16 | 8.55 | 8.94 | 9.32 | 9.71 | 10.10 | 10.48 | 10.87 | 11.26 | 11.64 | 12.03 | 12.42 | 12.81 |

### BR Motor on Right Side

2D CAD 3D CAD • CAD Download : www.gmtlinear.com •

(Unit:mm)

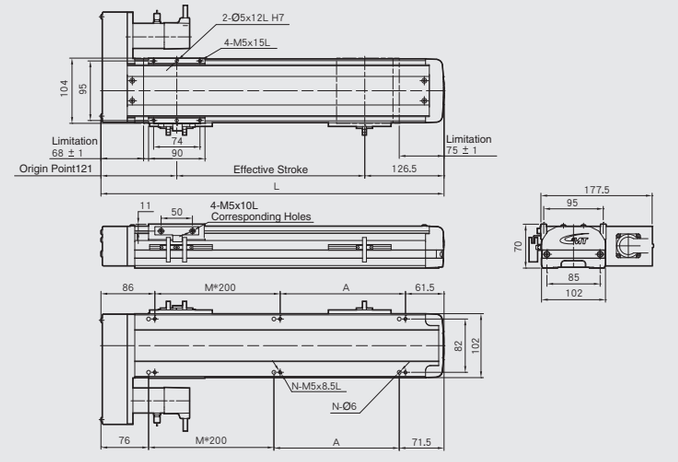


| Stroke | 100 | 150 | 200 | 250 | 300 | 350 | 400 | 450 | 500 | 550 | 600 | 650 | 700 | 750 | 800 | 850 | 900 | 950 | 1000 | 1050 |
|---|---|---|---|---|---|---|---|---|---|---|---|---|---|---|---|---|---|---|---|---|
| L | 347.5 | 397.5 | 447.5 | 497.5 | 547.5 | 597.5 | 647.5 | 697.5 | 747.5 | 797.5 | 847.5 | 897.5 | 947.5 | 997.5 | 1047.5 | 1097.5 | 1147.5 | 1197.5 | 1247.5 | 1297.5 |
| A | 200 | 50 | 100 | 150 | 200 | 50 | 100 | 150 | 200 | 50 | 100 | 150 | 200 | 50 | 100 | 150 | 200 | 50 | 100 | 150 |
| M | 0 | 1 | 1 | 1 | 1 | 2 | 2 | 2 | 2 | 3 | 3 | 3 | 3 | 4 | 4 | 4 | 4 | 5 | 5 | 5 |
| N | 4 | 6 | 6 | 6 | 6 | 8 | 8 | 8 | 8 | 10 | 10 | 10 | 10 | 12 | 12 | 12 | 12 | 14 | 14 | 14 |
| KG | 5.45 | 5.84 | 6.23 | 6.61 | 7 | 7.39 | 7.77 | 8.16 | 8.55 | 8.94 | 9.32 | 9.71 | 10.10 | 10.48 | 10.87 | 11.26 | 11.64 | 12.03 | 12.42 | 12.81 |

# GETH12
## Single Axis
## Motor at Bottom

### BM Motor at Bottom

2D CAD 3D CAD • CAD Download : www.gmtlinear.com •

(Unit:mm)

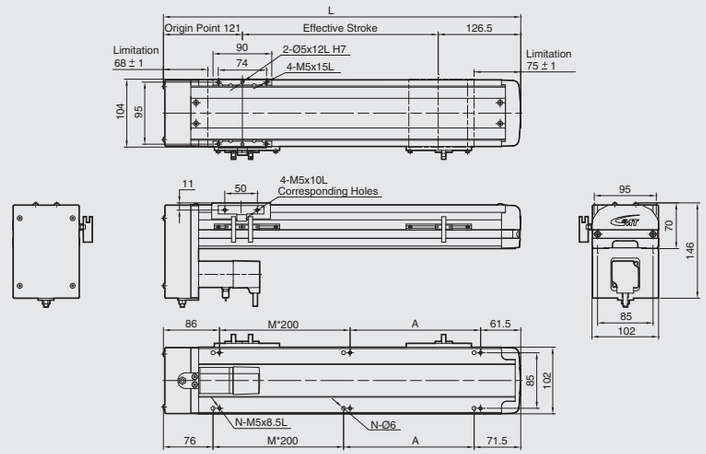


| Stroke | 100 | 150 | 200 | 250 | 300 | 350 | 400 | 450 | 500 | 550 | 600 | 650 | 700 | 750 | 800 | 850 | 900 | 950 | 1000 | 1050 |
|---|---|---|---|---|---|---|---|---|---|---|---|---|---|---|---|---|---|---|---|---|
| L | 347.5 | 397.5 | 447.5 | 497.5 | 547.5 | 597.5 | 647.5 | 697.5 | 747.5 | 797.5 | 847.5 | 897.5 | 947.5 | 997.5 | 1047.5 | 1097.5 | 1147.5 | 1197.5 | 1247.5 | 1297.5 |
| A | 200 | 50 | 100 | 150 | 200 | 50 | 100 | 150 | 200 | 50 | 100 | 150 | 200 | 50 | 100 | 150 | 200 | 50 | 100 | 150 |
| M | 0 | 1 | 1 | 1 | 1 | 2 | 2 | 2 | 2 | 3 | 3 | 3 | 3 | 4 | 4 | 4 | 4 | 5 | 5 | 5 |
| N | 4 | 6 | 6 | 6 | 6 | 8 | 8 | 8 | 8 | 10 | 10 | 10 | 10 | 12 | 12 | 12 | 12 | 14 | 14 | 14 |
| KG | 5.45 | 5.84 | 6.23 | 6.61 | 7 | 7.39 | 7.77 | 8.16 | 8.55 | 8.94 | 9.32 | 9.71 | 10.10 | 10.48 | 10.87 | 11.26 | 11.64 | 12.03 | 12.42 | 12.81 |

# GETH13
## Single Axis
## Motor at Bottom



Maximum Stroke 800 mm | Maximum Speed 1000 mm/s | Motor Output 200W | Ball Screw Ø16mm | Linear Guide 15X12.5-2 Pc

## Ordering Method

GETH13 - L 5 - 100 - M - M20B - C 4 - 0001

Model

**Ball Screw**

| | |
|---|---|
| L | Standard-MIT |

**Stroke**

100-1050 mm
50 Pitch

**Ball Screw Lead**

| | |
|---|---|
| 05 | 05 mm |
| 10 | 10 mm |
| 16 | 16 mm |
| 20 | 20 mm |

**Motor Position**

| | |
|---|---|
| M | In-Line Motor Built-In |
| BC | In-Line Motor |
| BM | Motor at Bottom |
| BR | Motor on Right Side |
| BL | Motor on Left Side |

**Motor Brand , Power Output**

| | | | | |
|---|---|---|---|---|
| M | Mitsubishi | 10 | 100W | B※ |
| P | Panasonic | 20 | - | |
| Y | Yaskawa | 40 | - | |
| T | Delta | 75 | - | |

※" B "means with brake
" - "means not applicable.

**Home Sensor**

| | |
|---|---|
| Internal | |
| A | Motor Side |
| B | Opposite Motor Side |
| External | |
| C | Motor Side |
| D | Opposite Motor Side |
| Without Sensor | |
| E | Without Sensor |

**Limit Sensor**

| | |
|---|---|
| Internal | |
| 1 | 1 Pc |
| 2 | 2 Pc |
| External | |
| 3 | 1 Pc |
| 4 | 2 Pc |
| Without Sensor | |
| 5 | Without Sensor |

**Special Order No.**



Motorized X-Axis ▶ Ball Screw Driven ▶ Linear Drive
GETH13
GMT GLOBAL INC.
GETH Specifications Introduction

## Specifications

| | | | | | | |
|---|---|---|---|---|---|---|
| Performance | Repeatability (mm) | | ±0.01 | | | |
| | Lead (mm) | | 5 | 10 | 16 | 20 |
| | Maximum Speed (mm / s) | | 250 | 500 | 800 | 1000 |
| | Maximum Load | Horizontal (kg) | 70 | 47 | 30 | 24 |
| | | Vertical (kg) | 17 | 12 | 6 | 4 |
| | Rated Thrust (N) | | 683 | 341 | 213 | 174 |
| | Stroke / Pitch (mm) | | 100-1050 mm / 50 mm Pitch | | | |
| Parts | AC Servo Motor Output (W) | | 200 | | | |
| | Ball Screw Ø (mm) | | C7Ø16 | | | |
| | High Rigidity Linear Guide (mm) | | 15X12.5 | | | |
| | Coupling (mm) | | 14X10 | | | |
| | Home Sensor | External | EE-SX672 (NPN) | | | |
| | | Built-In | EE-SX674 (NPN) | | | |

※Shaft runout will occur when the stroke is over 750mm, deceleration will be the best solution to execute at that moment.

## Sensor Circuit Diagram

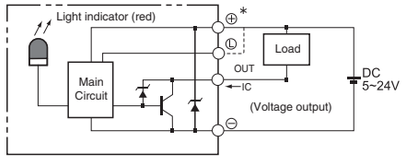


## Allowable Overhang (N.m)

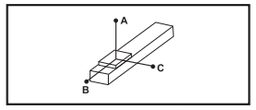


(Unit:mm)

| Horizontal Installation | | A | B | C |
|---|---|---|---|---|
| Lead5 | 40 kg | 2448 | 316 | 322 |
| | 55 kg | 2197 | 247 | 257 |
| | 70 kg | 2005 | 207 | 219 |
| Lead 10 | 25 kg | 1958 | 370 | 490 |
| | 35 kg | 1660 | 370 | 333 |
| | 47 kg | 1725 | 247 | 243 |
| Lead 16 | 10 kg | 1800 | 1400 | 800 |
| | 20 kg | 1100 | 700 | 450 |
| | 30 kg | 1047 | 445 | 324 |
| Lead 20 | 5 kg | 2105 | 1351 | 960 |
| | 15 kg | 1170 | 455 | 420 |
| | 24 kg | 1300 | 250 | 305 |

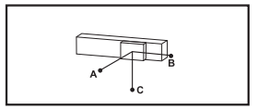


(Unit:mm)

| Wall Installation | | A | B | C |
|---|---|---|---|---|
| Lead5 | 40kg | 204 | 112 | 1394 |
| | 55kg | 130 | 57 | 1115 |
| | 70kg | 85 | 24 | 895 |
| Lead 10 | 25kg | 414 | 333 | 1277 |
| | 35kg | 235 | 157 | 929 |
| | 47kg | 129 | 57 | 751 |
| Lead 16 | 10kg | 461 | 372 | 1410 |
| | 20kg | 264 | 178 | 1027 |
| | 30kg | 148 | 69 | 832 |
| Lead 20 | 5kg | 1041 | 965 | 1560 |
| | 15kg | 400 | 271 | 770 |
| | 24kg | 220 | 108 | 685 |

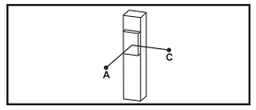


(Unit:mm)

| Vertical Installation | | A | C |
|---|---|---|---|
| Lead5 | 5kg | 762 | 614 |
| | 10kg | 607 | 489 |
| | 12kg | 498 | 493 |
| Lead 10 | 4kg | 1365 | 1101 |
| | 6kg | 901 | 727 |
| | 8kg | 674 | 543 |
| Lead 16 | 1kg | 1067 | 1217 |
| | 2kg | 997 | 805 |
| | 6kg | 747 | 603 |
| Lead 20 | 1kg | 580 | 580 |
| | 2kg | 1155 | 1155 |
| | 4kg | 1130 | 885 |

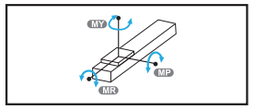


(Unit:N.m)

| Static Loading Moment | |
|---|---|
| MY | 174 |
| MP | 175 |
| MR | 153 |

## Servo Motor Options

| Brand | Mark | Brake | Motor Output | AC-Voltage | Motor Model | Driver Model |
|---|---|---|---|---|---|---|
| Mitsubishi | M | Without Brake (Horizontal Type) | 200 | 220 | HF-KP23 | MR-J3-20A |
| | | With Brake (Vertical Type) | 200 | 220 | HF-KP23B | MR-J3-20A |
| Panasonic | P | Without Brake (Horizontal Type) | 200 | 220 | MHMD022P1S | MADDT1207 |
| | | With Brake (Vertical Type) | 200 | 220 | MHMD022P1T | MADDT1207 |
| Delta | T | Without Brake (Horizontal Type) | 200 | 220 | ECMA-C20602ES | ASD-B20221-B |
| | | With Brake (Vertical Type) | 200 | 220 | ECMA-C20602FS | ASD-B20221-B |

# GETH13
## Single Axis
## In-Line Motor

### BC In-Line Motor

2D CAD 3D CAD • CAD Download : www.gmtlinear.com •

(Unit:mm)

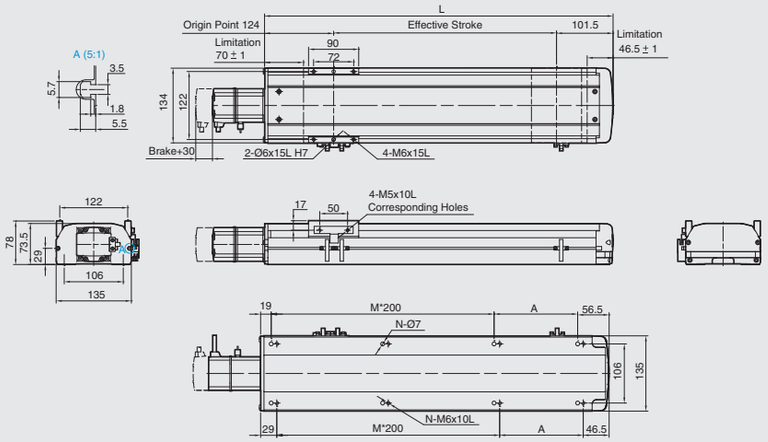


| Stroke | 100 | 150 | 200 | 250 | 300 | 350 | 400 | 450 | 500 | 550 | 600 | 650 | 700 | 750 | 800 | 850 | 900 | 950 | 1000 | 1050 |
|---|---|---|---|---|---|---|---|---|---|---|---|---|---|---|---|---|---|---|---|---|
| L | 325.5 | 375.5 | 425.5 | 475.5 | 525.5 | 575.5 | 625.5 | 675.5 | 725.5 | 775.5 | 825.5 | 875.5 | 925.5 | 975.5 | 1025.5 | 1075.5 | 1125.5 | 1175.5 | 1225.5 | 1275.5 |
| A | 50 | 100 | 150 | 200 | 50 | 100 | 150 | 200 | 50 | 100 | 150 | 200 | 50 | 100 | 150 | 200 | 50 | 100 | 150 | 200 |
| M | 1 | 1 | 1 | 1 | 2 | 2 | 2 | 2 | 3 | 3 | 3 | 3 | 4 | 4 | 4 | 4 | 5 | 5 | 5 | 5 |
| N | 6 | 6 | 6 | 6 | 8 | 8 | 8 | 8 | 10 | 10 | 10 | 10 | 12 | 12 | 12 | 12 | 14 | 14 | 14 | 14 |
| KG | 7.56 | 8.52 | 9.08 | 9.64 | 10.20 | 10.76 | 11.32 | 11.88 | 12.44 | 13 | 13.56 | 14.12 | 14.68 | 15.24 | 15.80 | 16.36 | 16.92 | 17.48 | 18.04 | 18.60 |

### M In-Line Motor Built-In

2D CAD 3D CAD • CAD Download : www.gmtlinear.com •

(Unit:mm)

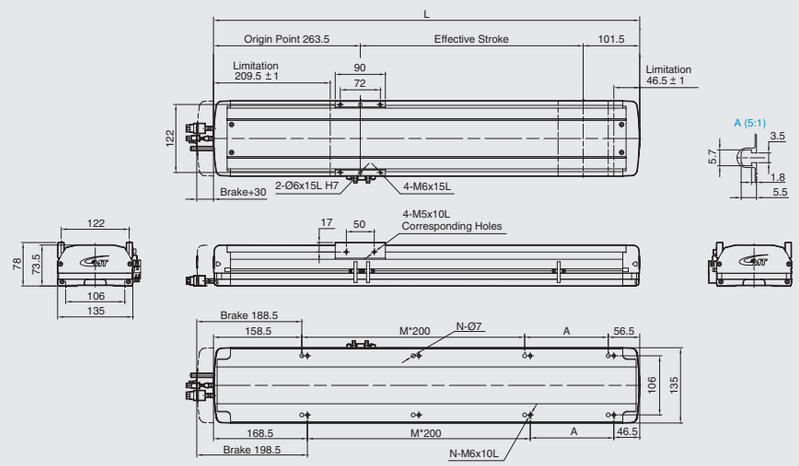


| Stroke | 100 | 150 | 200 | 250 | 300 | 350 | 400 | 450 | 500 | 550 | 600 | 650 | 700 | 750 | 800 | 850 | 900 | 950 | 1000 | 1050 |
|---|---|---|---|---|---|---|---|---|---|---|---|---|---|---|---|---|---|---|---|---|
| L | 465 | 515 | 565 | 615 | 665 | 715 | 765 | 815 | 865 | 915 | 965 | 1015 | 1065 | 1115 | 1165 | 1215 | 1265 | 1315 | 1365 | 1415 |
| A | 50 | 100 | 150 | 200 | 50 | 100 | 150 | 200 | 50 | 100 | 150 | 200 | 50 | 100 | 150 | 200 | 50 | 100 | 150 | 200 |
| M | 1 | 1 | 1 | 1 | 2 | 2 | 2 | 2 | 3 | 3 | 3 | 3 | 4 | 4 | 4 | 4 | 5 | 5 | 5 | 5 |
| N | 6 | 6 | 6 | 6 | 8 | 8 | 8 | 8 | 10 | 10 | 10 | 10 | 12 | 12 | 12 | 12 | 14 | 14 | 14 | 14 |
| KG | 8.86 | 9.42 | 9.98 | 10.54 | 11.1 | 11.66 | 12.22 | 12.78 | 13.34 | 13.9 | 14.46 | 15.02 | 15.58 | 16.14 | 16.70 | 17.26 | 17.82 | 18.38 | 18.94 | 19.5 |





# GETH5M
## Single Axis
## Motor on Left Side / Motor on Right Side

### BL Motor on Left Side

2D CAD 3D CAD • CAD Download : www.gmtlinear.com •

(Unit:mm)

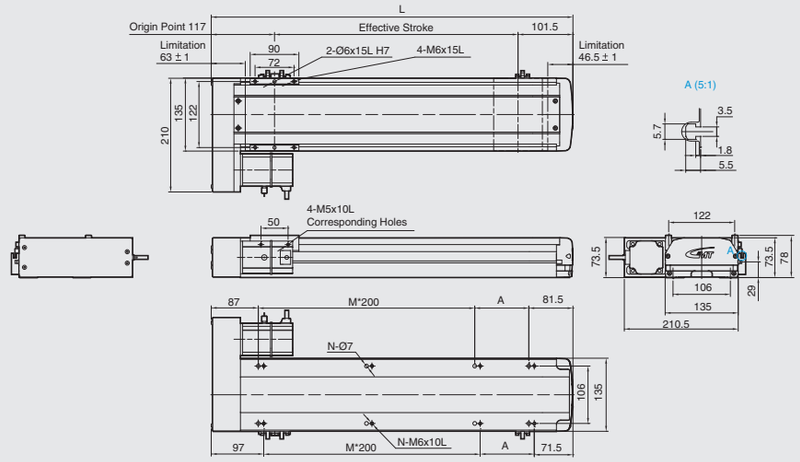


| Stroke | 100 | 150 | 200 | 250 | 300 | 350 | 400 | 450 | 500 | 550 | 600 | 650 | 700 | 750 | 800 | 850 | 900 | 950 | 1000 | 1050 |
|---|---|---|---|---|---|---|---|---|---|---|---|---|---|---|---|---|---|---|---|---|
| L | 318.5 | 368.5 | 418.5 | 468.5 | 518.5 | 568.5 | 618.5 | 668.5 | 718.5 | 768.5 | 818.5 | 868.5 | 918.5 | 968.5 | 1018.5 | 1068.5 | 1118.5 | 1168.5 | 1218.5 | 1268.5 |
| A | 150 | 200 | 50 | 100 | 150 | 200 | 50 | 100 | 150 | 200 | 50 | 100 | 150 | 200 | 50 | 100 | 150 | 200 | 50 | 100 |
| M | 0 | 0 | 1 | 1 | 1 | 1 | 2 | 2 | 2 | 2 | 3 | 3 | 3 | 3 | 4 | 4 | 4 | 4 | 5 | 5 |
| N | 4 | 4 | 6 | 6 | 6 | 6 | 8 | 8 | 8 | 8 | 10 | 10 | 10 | 10 | 12 | 12 | 12 | 12 | 14 | 14 |
| KG | 8.5 | 9.06 | 9.62 | 10.18 | 10.74 | 11.3 | 11.86 | 12.42 | 12.98 | 13.54 | 14.10 | 14.66 | 15.22 | 15.78 | 16.34 | 16.9 | 17.46 | 18.02 | 18.58 | 19.14 |

### BR Motor on Right Side

2D CAD 3D CAD • CAD Download : www.gmtlinear.com •

(Unit:mm)

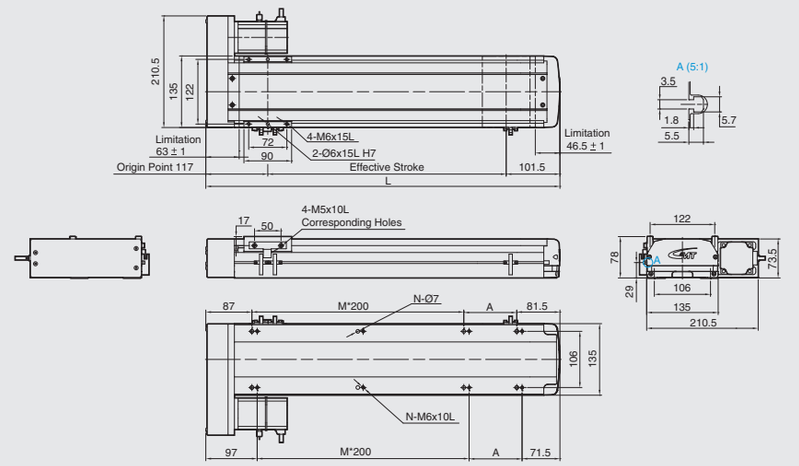


| Stroke | 100 | 150 | 200 | 250 | 300 | 350 | 400 | 450 | 500 | 550 | 600 | 650 | 700 | 750 | 800 | 850 | 900 | 950 | 1000 | 1050 |
|---|---|---|---|---|---|---|---|---|---|---|---|---|---|---|---|---|---|---|---|---|
| L | 318.5 | 368.5 | 418.5 | 468.5 | 518.5 | 568.5 | 618.5 | 668.5 | 718.5 | 768.5 | 818.5 | 868.5 | 918.5 | 968.5 | 1018.5 | 1068.5 | 1118.5 | 1168.5 | 1218.5 | 1268.5 |
| A | 150 | 200 | 50 | 100 | 150 | 200 | 50 | 100 | 150 | 200 | 50 | 100 | 150 | 200 | 50 | 100 | 150 | 200 | 50 | 100 |
| M | 0 | 0 | 1 | 1 | 1 | 1 | 2 | 2 | 2 | 2 | 3 | 3 | 3 | 3 | 4 | 4 | 4 | 4 | 5 | 5 |
| N | 4 | 4 | 6 | 6 | 6 | 6 | 8 | 8 | 8 | 8 | 10 | 10 | 10 | 10 | 12 | 12 | 12 | 12 | 14 | 14 |
| KG | 8.5 | 9.06 | 9.62 | 10.18 | 10.74 | 11.3 | 11.86 | 12.42 | 12.98 | 13.54 | 14.10 | 14.66 | 15.22 | 15.78 | 16.34 | 16.9 | 17.46 | 18.02 | 18.58 | 19.14 |

# GETH13
## Single Axis
## Motor at Bottom

### BM Motor at Bottom

2D CAD 3D CAD • CAD Download : www.gmtlinear.com •

(Unit:mm)

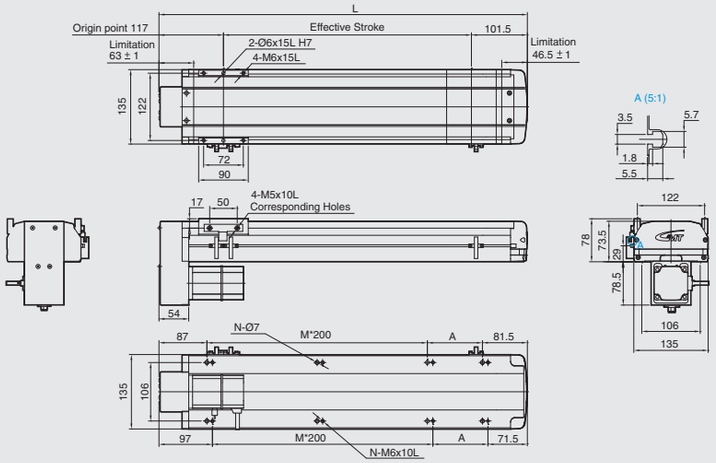


| Stroke | 100 | 150 | 200 | 250 | 300 | 350 | 400 | 450 | 500 | 550 | 600 | 650 | 700 | 750 | 800 | 850 | 900 | 950 | 1000 | 1050 |
|---|---|---|---|---|---|---|---|---|---|---|---|---|---|---|---|---|---|---|---|---|
| L | 318.5 | 368.5 | 418.5 | 468.5 | 518.5 | 568.5 | 618.5 | 668.5 | 718.5 | 768.5 | 818.5 | 868.5 | 918.5 | 968.5 | 1018.5 | 1068.5 | 1118.5 | 1168.5 | 1218.5 | 1268.5 |
| A | 150 | 200 | 50 | 100 | 150 | 200 | 50 | 100 | 150 | 200 | 50 | 100 | 150 | 200 | 50 | 100 | 150 | 200 | 50 | 100 |
| M | 0 | 0 | 1 | 1 | 1 | 1 | 2 | 2 | 2 | 2 | 3 | 3 | 3 | 3 | 4 | 4 | 4 | 4 | 5 | 5 |
| N | 4 | 4 | 6 | 6 | 6 | 6 | 8 | 8 | 8 | 8 | 10 | 10 | 10 | 10 | 12 | 12 | 12 | 12 | 14 | 14 |
| KG | 8.5 | 9.06 | 9.62 | 10.18 | 10.74 | 11.3 | 11.86 | 12.42 | 12.98 | 13.54 | 14.10 | 14.66 | 15.22 | 15.78 | 16.34 | 16.9 | 17.46 | 18.02 | 18.58 | 19.14 |

# GETH14
## Single Axis
## Ball Screw Driven



Maximum Stroke 1050 mm | Maximum Speed 1000 mm/s | Motor Output 200W | Ball Screw Ø16 mm | Linear Guide 15X12.5-2 Pc

## Ordering Method

GETH14 - L 16 - 100 - M - M20B - C 4 - 0001

Model | Special Order No.

**Ball Screw**

| | |
|---|---|
| L | Standard-MIT |

**Stroke**

100-1050 mm
50 Pitch

**Ball Screw Lead**

| | |
|---|---|
| 05 | 05 mm |
| 10 | 10 mm |
| 16 | 16 mm |
| 20 | 20 mm |

**Motor Position**

| | |
|---|---|
| M | In-Line Motor Built-In |
| BC | In-Line Motor |
| BM | Motor at Bottom |
| BR | Motor on Right Side |
| BL | Motor on Left Side |

**Motor Brand , Power Output**

| | | | | |
|---|---|---|---|---|
| M | Mitsubishi | 10 | - | B※ |
| P | Panasonic | 20 | 200W | |
| Y | Yaskawa | 40 | - | |
| T | Delta | 75 | - | |

※" B "means with brake
" - "means not applicable.

**Home Sensor**

| | |
|---|---|
| Internal | |
| A | Motor Side |
| B | Opposite Motor Side |
| External | |
| C | Motor Side |
| D | Opposite Motor Side |
| Without Sensor | |
| E | Without Sensor |

**Limit Sensor**

| | |
|---|---|
| Internal | |
| 1 | 1 Pc |
| 2 | 2 Pc |
| External | |
| 3 | 1 Pc |
| 4 | 2 Pc |
| Without Sensor | |
| 5 | Without Sensor |



Motorized X-Axis ▶ Ball Screw Driven ▶ Linear Drive
GETH14
GMT GLOBAL INC.
GETH Specifications Introduction

## Specifications

| | | | | | | |
|---|---|---|---|---|---|---|
| Performance | Repeatability (mm) | | ±0.01 | | | |
| | Lead (mm) | | 5 | 10 | 16 | 20 |
| | Maximum Speed (mm / s) | | 250 | 500 | 800 | 1000 |
| | Maximum Load | Horizontal (kg) | 95 | 75 | 44 | 35 |
| | | Vertical (kg) | 27 | 18 | 7 | 6 |
| | Rated Thrust (N) | | 683 | 341 | 213 | 174 |
| | Stroke / Pitch (mm) | | 100-1050 mm / 50 mm Pitch | | | |
| Parts | AC Servo Motor Output (W) | | 200 | | | |
| | Ball Screw Ø (mm) | | C7Ø16 | | | |
| | High Rigidity Linear Guide (mm) | | 15X12.5 | | | |
| | Coupling (mm) | | 14X10 | | | |
| | Home Sensor | External | EE-SX672 (NPN) | | | |
| | | Built-In | EE-SX674 (NPN) | | | |

※Shaft runout will occur when the stroke is over 600mm, deceleration will be the best solution to execute at that moment.

## Sensor Circuit Diagram

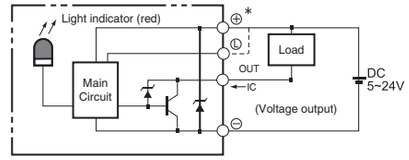


## Allowable Overhang (N.m)

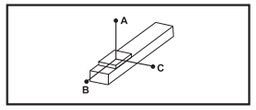


(Unit:mm)

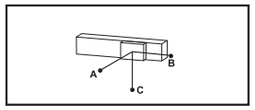


(Unit:mm)

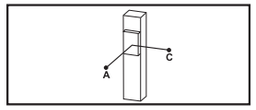


(Unit:mm)

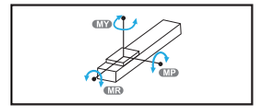


(Unit:N.m)

| Horizontal Installation | | A | B | C |
|---|---|---|---|---|
| Lead5 | 60 kg | 2448 | 316 | 322 |
| | 80 kg | 2197 | 247 | 257 |
| | 95 kg | 2005 | 207 | 219 |
| Lead 10 | 30 kg | 1958 | 370 | 490 |
| | 50 kg | 1660 | 370 | 333 |
| | 75 kg | 1725 | 247 | 243 |
| Lead 16 | 10 kg | 2265 | 1674 | 961 |
| | 20 kg | 1402 | 855 | 537 |
| | 44 kg | 1047 | 445 | 324 |
| Lead 20 | 10 kg | 2263 | 1672 | 958 |
| | 20 kg | 1400 | 852 | 535 |
| | 35 kg | 1052 | 448 | 328 |

| Wall Installation | | A | B | C |
|---|---|---|---|---|
| Lead5 | 60kg | 204 | 112 | 1394 |
| | 80kg | 130 | 57 | 1115 |
| | 95kg | 85 | 24 | 895 |
| Lead 10 | 30kg | 414 | 333 | 1277 |
| | 50kg | 235 | 372 | 929 |
| | 75kg | 129 | 57 | 751 |
| Lead 16 | 10kg | 461 | 372 | 1410 |
| | 20kg | 264 | 178 | 1027 |
| | 44kg | 148 | 69 | 832 |
| Lead 20 | 10kg | 997 | 1217 | 1709 |
| | 20kg | 513 | 555 | 985 |
| | 35kg | 268 | 231 | 640 |

| Vertical Installation | | A | C |
|---|---|---|---|
| Lead5 | 20kg | 762 | 614 |
| | 25kg | 607 | 489 |
| | 27kg | 498 | 483 |
| Lead 10 | 10kg | 1365 | 1101 |
| | 15kg | 901 | 727 |
| | 18kg | 674 | 543 |
| Lead 16 | 2kg | 2420 | 2031 |
| | 4kg | 1690 | 1360 |
| | 7kg | 1300 | 1050 |
| Lead 20 | 6kg | 1695 | 1361 |
| | - | - | - |
| | - | - | - |

| Static Loading Moment | |
|---|---|
| MY | 551 |
| MP | 552 |
| MR | 485 |

## Servo Motor Options

| Brand | Mark | Brake | Motor Output | AC-Voltage | Motor Model | Driver Model |
|---|---|---|---|---|---|---|
| Mitsubishi | M | Without Brake (Horizontal Type) | 200 | 220 | HF-KP23 | MR-J3-20A |
| | | With Brake (Vertical Type) | 200 | 220 | HF-KP23B | MR-J3-20A |
| Panasonic | P | Without Brake (Horizontal Type) | 200 | 220 | MHMD022P1S | MADDT1207 |
| | | With Brake (Vertical Type) | 200 | 220 | MHMD022P1T | MADDT1207 |
| Delta | T | Without Brake (Horizontal Type) | 200 | 220 | ECMA-C20602ES | ASD-B20221-B |
| | | With Brake (Vertical Type) | 200 | 220 | ECMA-C20602FS | ASD-B20221-B |

# GETH14
## Single Axis
## In-Line Motor / In-Line Motor Built-In

### BC In-Line Motor

(Unit:mm)

• CAD Download : www.gmtlinear.com •

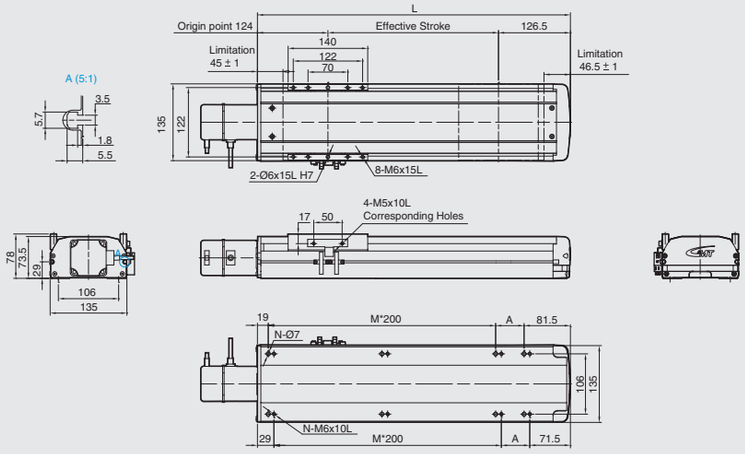


| Stroke | 100 | 150 | 200 | 250 | 300 | 350 | 400 | 450 | 500 | 550 | 600 | 650 | 700 | 750 | 800 | 850 | 900 | 950 | 1000 | 1050 |
|---|---|---|---|---|---|---|---|---|---|---|---|---|---|---|---|---|---|---|---|---|
| L | 350.5 | 400.5 | 450.5 | 500.5 | 550.5 | 600.5 | 650.5 | 700.5 | 750.5 | 800.5 | 850.5 | 900.5 | 950.5 | 1000.5 | 1050.5 | 1100.5 | 1150.5 | 1200.5 | 1250.5 | 1300.5 |
| A | 50 | 100 | 150 | 200 | 50 | 100 | 150 | 200 | 50 | 100 | 150 | 200 | 50 | 100 | 150 | 200 | 50 | 100 | 150 | 200 |
| M | 1 | 1 | 1 | 1 | 2 | 2 | 2 | 2 | 3 | 3 | 3 | 3 | 4 | 4 | 4 | 4 | 5 | 5 | 5 | 5 |
| N | 6 | 6 | 6 | 6 | 8 | 8 | 8 | 8 | 10 | 10 | 10 | 10 | 12 | 12 | 12 | 12 | 14 | 14 | 14 | 14 |
| KG | 9.3 | 9.85 | 10.4 | 10.95 | 11.5 | 12.05 | 12.6 | 13.15 | 13.7 | 14.25 | 14.8 | 15.35 | 15.9 | 16.45 | 17 | 17.55 | 18.1 | 18.65 | 16.2 | 16.75 |

### M In-Line Motor Built-In

(Unit:mm)

• CAD Download : www.gmtlinear.com •

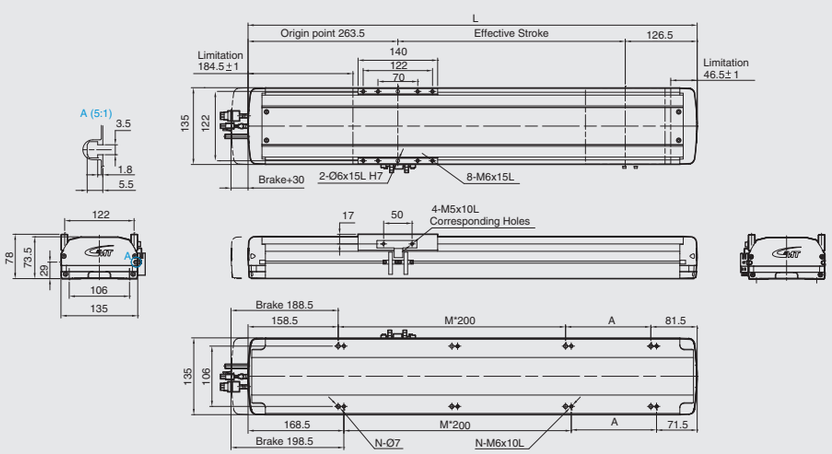


| Stroke | 100 | 150 | 200 | 250 | 300 | 350 | 400 | 450 | 500 | 550 | 600 | 650 | 700 | 750 | 800 | 850 | 900 | 950 | 1000 | 1050 |
|---|---|---|---|---|---|---|---|---|---|---|---|---|---|---|---|---|---|---|---|---|
| L | 490 | 540 | 590 | 640 | 690 | 740 | 790 | 840 | 890 | 940 | 990 | 1040 | 1090 | 1140 | 1190 | 1240 | 1290 | 1340 | 1390 | 1440 |
| A | 50 | 100 | 150 | 200 | 50 | 100 | 150 | 200 | 50 | 100 | 150 | 200 | 50 | 100 | 150 | 200 | 50 | 100 | 150 | 200 |
| M | 1 | 1 | 1 | 1 | 2 | 2 | 2 | 2 | 3 | 3 | 3 | 3 | 4 | 4 | 4 | 4 | 5 | 5 | 5 | 5 |
| N | 6 | 6 | 6 | 6 | 8 | 8 | 8 | 8 | 10 | 10 | 10 | 10 | 12 | 12 | 12 | 12 | 14 | 14 | 14 | 14 |
| KG | 10.06 | 10.62 | 11.18 | 11.74 | 12.3 | 12.86 | 13.42 | 13.98 | 14.54 | 15.10 | 15.66 | 16.22 | 16.78 | 17.34 | 17.9 | 18.46 | 19.02 | 19.58 | 20.14 | 20.70 |





# GETH14
## Single Axis
## Motor on Left Side / Motor on Right Side

### BL Motor on Left Side

(Unit:mm)

• CAD Download : www.gmtlinear.com •

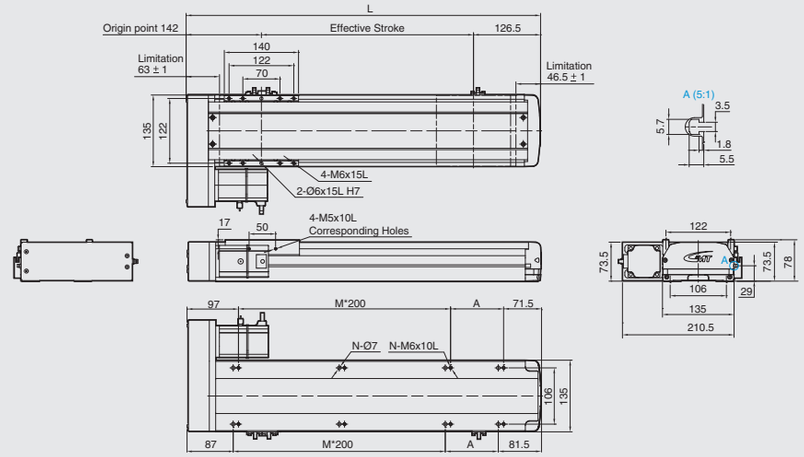


| Stroke | 100 | 150 | 200 | 250 | 300 | 350 | 400 | 450 | 500 | 550 | 600 | 650 | 700 | 750 | 800 | 850 | 900 | 950 | 1000 | 1050 |
|---|---|---|---|---|---|---|---|---|---|---|---|---|---|---|---|---|---|---|---|---|
| L | 368.5 | 418.5 | 468.5 | 518.5 | 568.5 | 618.5 | 668.5 | 718.5 | 768.5 | 818.5 | 868.5 | 918.5 | 968.5 | 1018.5 | 1068.5 | 1118.5 | 1168.5 | 1218.5 | 1268.5 | 1318.5 |
| A | 200 | 50 | 100 | 150 | 200 | 50 | 100 | 150 | 200 | 50 | 100 | 150 | 200 | 50 | 100 | 150 | 200 | 50 | 100 | 150 |
| M | 0 | 1 | 1 | 1 | 1 | 2 | 2 | 2 | 2 | 3 | 3 | 3 | 3 | 4 | 4 | 4 | 4 | 5 | 5 | 5 |
| N | 4 | 6 | 6 | 6 | 6 | 8 | 8 | 8 | 8 | 10 | 10 | 10 | 10 | 12 | 12 | 12 | 12 | 14 | 14 | 14 |
| KG | 9.94 | 10.48 | 11.02 | 11.56 | 12.1 | 12.64 | 13.18 | 13.72 | 14.26 | 14.8 | 15.34 | 15.88 | 16.42 | 16.96 | 17.5 | 18.04 | 18.58 | 19.12 | 19.66 | 20.2 |

### BR Motor on Right Side

(Unit:mm)

• CAD Download : www.gmtlinear.com •

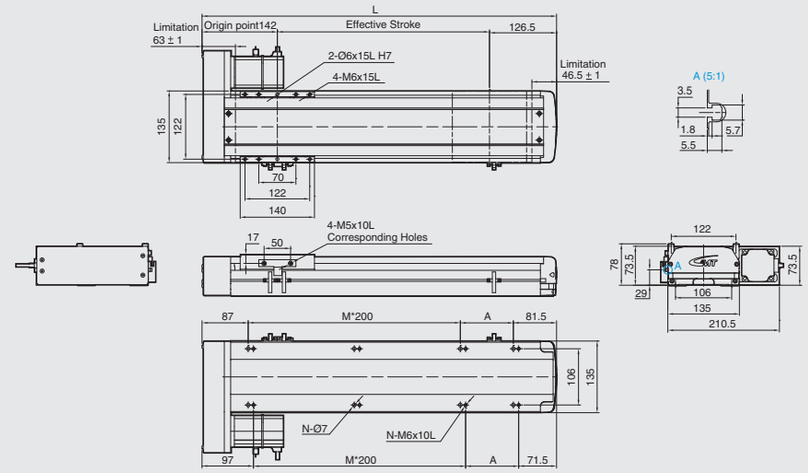


| Stroke | 100 | 150 | 200 | 250 | 300 | 350 | 400 | 450 | 500 | 550 | 600 | 650 | 700 | 750 | 800 | 850 | 900 | 950 | 1000 | 1050 |
|---|---|---|---|---|---|---|---|---|---|---|---|---|---|---|---|---|---|---|---|---|
| L | 368.5 | 418.5 | 468.5 | 518.5 | 568.5 | 618.5 | 668.5 | 718.5 | 768.5 | 818.5 | 868.5 | 918.5 | 968.5 | 1018.5 | 1068.5 | 1118.5 | 1168.5 | 1218.5 | 1268.5 | 1318.5 |
| A | 200 | 50 | 100 | 150 | 200 | 50 | 100 | 150 | 200 | 50 | 100 | 150 | 200 | 50 | 100 | 150 | 200 | 50 | 100 | 150 |
| M | 0 | 1 | 1 | 1 | 1 | 2 | 2 | 2 | 2 | 3 | 3 | 3 | 3 | 4 | 4 | 4 | 4 | 5 | 5 | 5 |
| N | 4 | 6 | 6 | 6 | 6 | 8 | 8 | 8 | 8 | 10 | 10 | 10 | 10 | 12 | 12 | 12 | 12 | 14 | 14 | 14 |
| KG | 9.94 | 10.48 | 11.02 | 11.56 | 12.1 | 12.64 | 13.18 | 13.72 | 14.26 | 14.8 | 15.34 | 15.88 | 16.42 | 16.96 | 17.5 | 18.04 | 18.58 | 19.12 | 19.66 | 20.2 |

# GETH14
## Single Axis
## In-Line Motor

### BC In-Line Motor

2D CAD 3D CAD • CAD Download : www.gmtlinear.com •

(Unit:mm)

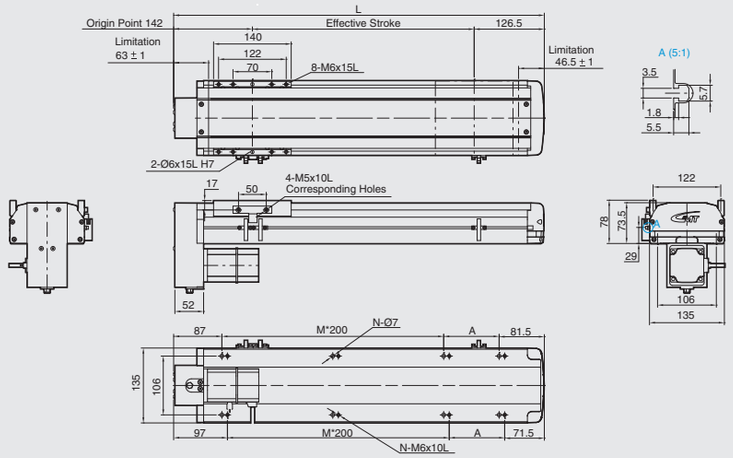


| Stroke | 100 | 150 | 200 | 250 | 300 | 350 | 400 | 450 | 500 | 550 | 600 | 650 | 700 | 750 | 800 | 850 | 900 | 950 | 1000 | 1050 |
|---|---|---|---|---|---|---|---|---|---|---|---|---|---|---|---|---|---|---|---|---|
| L | 368.5 | 418.5 | 468.5 | 518.5 | 568.5 | 618.5 | 668.5 | 718.5 | 768.5 | 818.5 | 868.5 | 918.5 | 968.5 | 1018.5 | 1068.5 | 1118.5 | 1168.5 | 1218.5 | 1268.5 | 1318.5 |
| A | 200 | 50 | 100 | 150 | 200 | 50 | 100 | 150 | 200 | 50 | 100 | 150 | 200 | 50 | 100 | 150 | 200 | 50 | 100 | 150 |
| M | 0 | 1 | 1 | 1 | 1 | 2 | 2 | 2 | 2 | 3 | 3 | 3 | 3 | 4 | 4 | 4 | 4 | 5 | 5 | 5 |
| N | 4 | 6 | 6 | 6 | 6 | 8 | 8 | 8 | 8 | 10 | 10 | 10 | 10 | 12 | 12 | 12 | 12 | 14 | 14 | 14 |
| KG | 9.94 | 10.48 | 11.02 | 11.56 | 12.1 | 12.64 | 13.18 | 13.72 | 14.26 | 14.8 | 15.34 | 15.88 | 16.42 | 16.96 | 17.5 | 18.04 | 18.58 | 19.12 | 19.66 | 20.2 |

# GETH14
## Single Axis
## Ball Screw Driven



Maximum Stroke 1050 mm | Maximum Speed 1000 mm/s | Motor Output 400W | Ball Screw Ø16 mm | Linear Guide 15X12.5-2 Pc

## Ordering Method

GETH14 - L 5 - 100 - M - M40B - C 4 - 0001

Model

Ball Screw

| | |
|---|---|
| L | Standard-MIT |

Stroke

100-1050 mm
50 Pitch

Special Order No.

Ball Screw Lead

| | |
|---|---|
| 05 | 05 mm |
| 10 | 10 mm |
| 16 | 16 mm |
| 20 | 20 mm |

Motor Position

| | |
|---|---|
| M | In-Line Motor Built-In |
| BC | In-Line Motor |
| BM | Motor at Bottom |
| BR | Motor on Right Side |
| BL | Motor on Left Side |

Motor Brand , Power Output

| | | | | |
|---|---|---|---|---|
| M | Mitsubishi | 10 | - | B※ |
| P | Panasonic | 20 | - | |
| Y | Yaskawa | 40 | 400W | |
| T | Delta | 75 | - | |

※" B "means with brake
" - "means not applicable.

Home Sensor

| | |
|---|---|
| **Internal** | |
| A | Motor Side |
| B | Opposite Motor Side |
| **External** | |
| C | Motor Side |
| D | Opposite Motor Side |
| **Without Sensor** | |
| E | Without Sensor |

Limit Sensor

| | |
|---|---|
| **Internal** | |
| 1 | 1 Pc |
| 2 | 2 Pc |
| **External** | |
| 3 | 1 Pc |
| 4 | 2 Pc |
| **Without Sensor** | |
| 5 | Without Sensor |



Motorized X-Axis ▶ Ball Screw Driven ▶ Linear Drive
GETH14
GMT GLOBAL INC.
GETH Specifications Introduction

## Specifications

| | | | | | | |
|---|---|---|---|---|---|---|
| Performance | Repeatability (mm) | | ±0.01 | | | |
| | Lead (mm) | | 5 | 10 | 16 | 20 |
| | Maximum Speed (mm / s) | | 250 | 500 | 800 | 1000 |
| | Maximum Load | Horizontal (kg) | 110 | 88 | 48 | 40 |
| | | Vertical (kg) | 33 | 22 | 10 | 8 |
| | Rated Thrust (N) | | 1388 | 694 | 433 | 347 |
| | Stroke / Pitch (mm) | | 100-1050 mm / 50 mm Pitch | | | |
| Parts | AC Servo Motor Output (W) | | 400 | | | |
| | Ball Screw Ø (mm) | | C7Ø16 | | | |
| | High Rigidity Linear Guide (mm) | | 15X12.5 | | | |
| | Coupling (mm) | | 14X10 | | | |
| | Home Sensor | External | EE-SX672 (NPN) | | | |
| | | Built-In | EE-SX674 (NPN) | | | |

※Shaft runout will occur when the stroke is over 750mm, deceleration will be the best solution to execute at that moment.

## Sensor Circuit Diagram

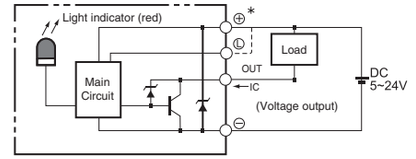


## Allowable Overhang (N.m)

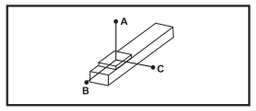


(Unit:mm)

| Horizontal Installation | | A | B | C |
|---|---|---|---|---|
| Lead5 | 60kg | 2448 | 316 | 322 |
| | 80kg | 2197 | 247 | 257 |
| | 110kg | 2005 | 207 | 219 |
| Lead 10 | 30kg | 1958 | 370 | 490 |
| | 50kg | 1660 | 370 | 333 |
| | 88kg | 1725 | 247 | 243 |
| Lead 16 | 10kg | 2265 | 1674 | 961 |
| | 20kg | 1402 | 855 | 537 |
| | 48kg | 1047 | 445 | 324 |
| Lead 20 | 10kg | 2263 | 1672 | 958 |
| | 20kg | 1400 | 852 | 535 |
| | 40kg | 1052 | 448 | 328 |

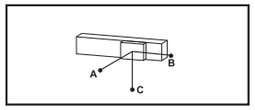


(Unit:mm)

| Wall Installation | | A | B | C |
|---|---|---|---|---|
| Lead5 | 60kg | 204 | 112 | 1394 |
| | 80kg | 130 | 57 | 1115 |
| | 110kg | 85 | 24 | 895 |
| Lead 10 | 30kg | 414 | 333 | 1277 |
| | 50kg | 235 | 372 | 929 |
| | 88kg | 129 | 57 | 751 |
| Lead 16 | 10kg | 461 | 372 | 1410 |
| | 20kg | 264 | 178 | 1027 |
| | 48kg | 148 | 69 | 832 |
| Lead 20 | 10kg | 997 | 1217 | 1709 |
| | 20kg | 513 | 555 | 985 |
| | 40kg | 268 | 231 | 640 |

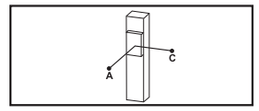


(Unit:mm)

| Vertical Installation | | A | C |
|---|---|---|---|
| Lead5 | 20kg | 762 | 614 |
| | 25kg | 607 | 489 |
| | 33kg | 498 | 483 |
| Lead 10 | 10kg | 1365 | 1101 |
| | 15kg | 901 | 727 |
| | 22kg | 674 | 543 |
| Lead 16 | 2kg | 1067 | 1217 |
| | 4kg | 997 | 805 |
| | 10kg | 747 | 603 |
| Lead 20 | 4kg | 2402 | 2018 |
| | 6kg | 1701 | 1366 |
| | 8kg | 1305 | 1055 |

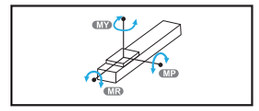


(Unit:N.m)

| Static Loading Moment | |
|---|---|
| MY | 551 |
| MP | 552 |
| MR | 485 |

## Servo Motor Options

| Brand | Mark | Brake | Motor Output | AC-Voltage | Motor Model | Driver Model |
|---|---|---|---|---|---|---|
| Mitsubishi | M | Without Brake (Horizontal Type) | 400 | 220 | HF-KP43 | MR-J3-40A |
| | | With Brake (Vertical Type) | 400 | 220 | HF-KP43B | MR-J3-40A |
| Panasonic | P | Without Brake (Horizontal Type) | 400 | 220 | MHMD042P1S | MADDT2210 |
| | | With Brake (Vertical Type) | 400 | 220 | MHMD042P1T | MADDT2210 |
| Delta | T | Without Brake (Horizontal Type) | 400 | 220 | ECMA-C20604ES | ASD-B20421-B |
| | | With Brake (Vertical Type) | 400 | 220 | ECMA-C20604FS | ASD-B20421-B |

# GETH14
## Single Axis
## In-Line Motor / In-Line Motor Built-In

### BC In-Line Motor

2D CAD 3D CAD • CAD Download : www.gmtlinear.com •

(Unit:mm)

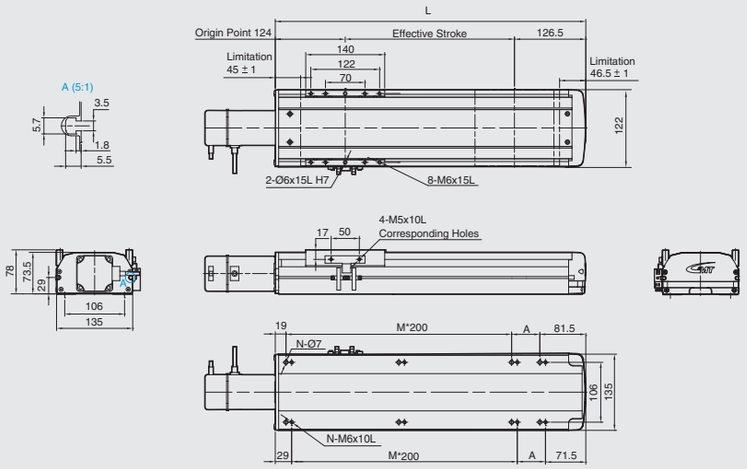


| Stroke | 100 | 150 | 200 | 250 | 300 | 350 | 400 | 450 | 500 | 550 | 600 | 650 | 700 | 750 | 800 | 850 | 900 | 950 | 1000 | 1050 |
|---|---|---|---|---|---|---|---|---|---|---|---|---|---|---|---|---|---|---|---|---|
| L | 350.5 | 400.5 | 450.5 | 500.5 | 550.5 | 600.5 | 650.5 | 700.5 | 750.5 | 800.5 | 850.5 | 900.5 | 950.5 | 1000.5 | 1050.5 | 1100.5 | 1150.5 | 1200.5 | 1250.5 | 1300.5 |
| A | 50 | 100 | 150 | 200 | 50 | 100 | 150 | 200 | 50 | 100 | 150 | 200 | 50 | 100 | 150 | 200 | 50 | 100 | 150 | 200 |
| M | 1 | 1 | 1 | 1 | 2 | 2 | 2 | 2 | 3 | 3 | 3 | 3 | 4 | 4 | 4 | 4 | 5 | 5 | 5 | 5 |
| N | 6 | 6 | 6 | 6 | 8 | 8 | 8 | 8 | 10 | 10 | 10 | 10 | 12 | 12 | 12 | 12 | 14 | 14 | 14 | 14 |
| KG | 9.3 | 9.85 | 10.4 | 10.95 | 11.5 | 12.05 | 12.6 | 13.15 | 13.7 | 14.25 | 14.8 | 15.35 | 15.9 | 16.45 | 17 | 17.55 | 18.1 | 18.65 | 16.2 | 16.75 |

### M In-Line Motor Built-In

2D CAD 3D CAD • CAD Download : www.gmtlinear.com •

(Unit:mm)

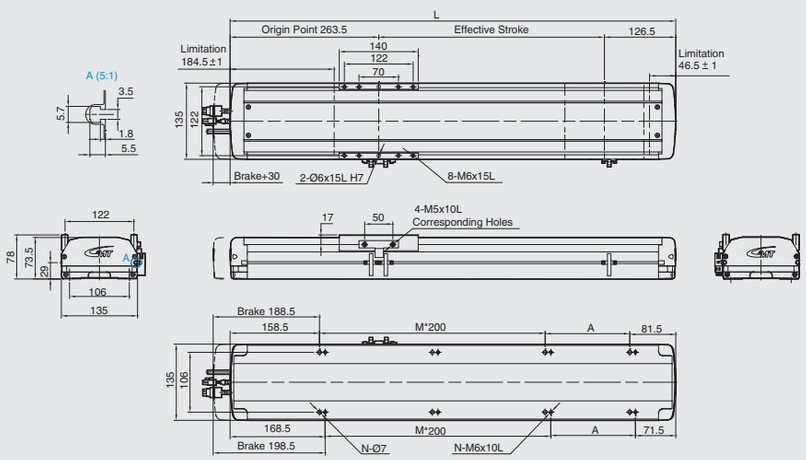


| Stroke | 100 | 150 | 200 | 250 | 300 | 350 | 400 | 450 | 500 | 550 | 600 | 650 | 700 | 750 | 800 | 850 | 900 | 950 | 1000 | 1050 |
|---|---|---|---|---|---|---|---|---|---|---|---|---|---|---|---|---|---|---|---|---|
| L | 490 | 540 | 590 | 640 | 690 | 740 | 790 | 840 | 890 | 940 | 990 | 1040 | 1090 | 1140 | 1190 | 1240 | 1290 | 1340 | 1390 | 1440 |
| A | 50 | 100 | 150 | 200 | 50 | 100 | 150 | 200 | 50 | 100 | 150 | 200 | 50 | 100 | 150 | 200 | 50 | 100 | 150 | 200 |
| M | 1 | 1 | 1 | 1 | 2 | 2 | 2 | 2 | 3 | 3 | 3 | 3 | 4 | 4 | 4 | 4 | 5 | 5 | 5 | 5 |
| N | 6 | 6 | 6 | 6 | 8 | 8 | 8 | 8 | 10 | 10 | 10 | 10 | 12 | 12 | 12 | 12 | 14 | 14 | 14 | 14 |
| KG | 10.06 | 10.62 | 11.18 | 11.74 | 12.3 | 12.86 | 13.42 | 13.98 | 14.54 | 15.10 | 15.66 | 16.22 | 16.78 | 17.34 | 17.9 | 18.46 | 19.02 | 19.58 | 20.14 | 20.70 |





# GETH14
## Single Axis
## Motor on Left Side / Motor on Right Side

### BL Motor on Left Side

2D CAD 3D CAD • CAD Download : www.gmtlinear.com •

(Unit:mm)

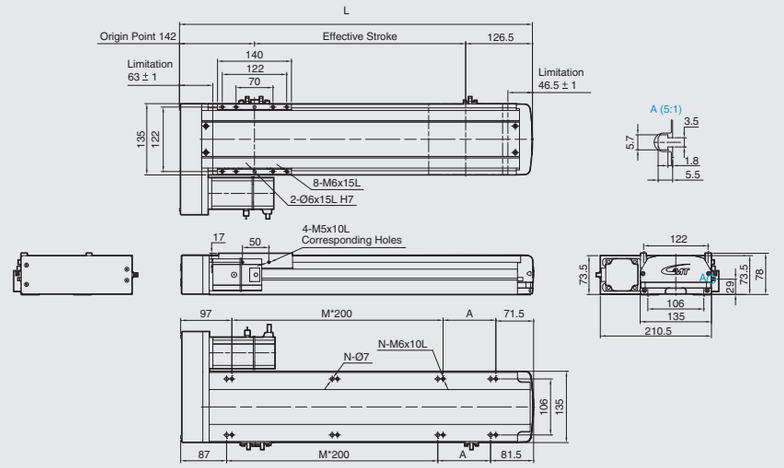


| Stroke | 100 | 150 | 200 | 250 | 300 | 350 | 400 | 450 | 500 | 550 | 600 | 650 | 700 | 750 | 800 | 850 | 900 | 950 | 1000 | 1050 |
|---|---|---|---|---|---|---|---|---|---|---|---|---|---|---|---|---|---|---|---|---|
| L | 368.5 | 418.5 | 468.5 | 518.5 | 568.5 | 618.5 | 668.5 | 718.5 | 768.5 | 818.5 | 868.5 | 918.5 | 968.5 | 1018.5 | 1068.5 | 1118.5 | 1168.5 | 1218.5 | 1268.5 | 1318.5 |
| A | 200 | 50 | 100 | 150 | 200 | 50 | 100 | 150 | 200 | 50 | 100 | 150 | 200 | 50 | 100 | 150 | 200 | 50 | 100 | 150 |
| M | 0 | 1 | 1 | 1 | 1 | 2 | 2 | 2 | 2 | 3 | 3 | 3 | 3 | 4 | 4 | 4 | 4 | 5 | 5 | 5 |
| N | 4 | 6 | 6 | 6 | 6 | 8 | 8 | 8 | 8 | 10 | 10 | 10 | 10 | 12 | 12 | 12 | 12 | 14 | 14 | 14 |
| KG | 9.94 | 10.48 | 11.02 | 11.56 | 12.1 | 12.64 | 13.18 | 13.72 | 14.26 | 14.8 | 15.34 | 15.88 | 16.42 | 16.96 | 17.5 | 18.04 | 18.58 | 19.12 | 19.66 | 20.2 |

### BR Motor on Right Side

2D CAD 3D CAD • CAD Download : www.gmtlinear.com •

(Unit:mm)

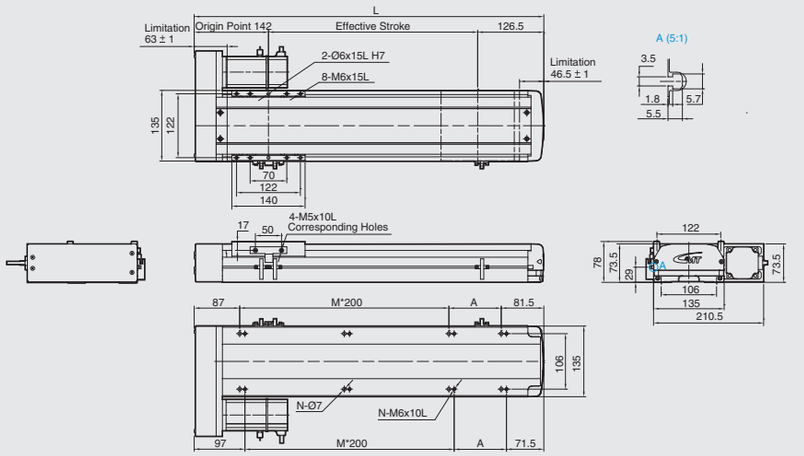


| Stroke | 100 | 150 | 200 | 250 | 300 | 350 | 400 | 450 | 500 | 550 | 600 | 650 | 700 | 750 | 800 | 850 | 900 | 950 | 1000 | 1050 |
|---|---|---|---|---|---|---|---|---|---|---|---|---|---|---|---|---|---|---|---|---|
| L | 368.5 | 418.5 | 468.5 | 518.5 | 568.5 | 618.5 | 668.5 | 718.5 | 768.5 | 818.5 | 868.5 | 918.5 | 968.5 | 1018.5 | 1068.5 | 1118.5 | 1168.5 | 1218.5 | 1268.5 | 1318.5 |
| A | 200 | 50 | 100 | 150 | 200 | 50 | 100 | 150 | 200 | 50 | 100 | 150 | 200 | 50 | 100 | 150 | 200 | 50 | 100 | 150 |
| M | 0 | 1 | 1 | 1 | 1 | 2 | 2 | 2 | 2 | 3 | 3 | 3 | 3 | 4 | 4 | 4 | 4 | 5 | 5 | 5 |
| N | 4 | 6 | 6 | 6 | 6 | 8 | 8 | 8 | 8 | 10 | 10 | 10 | 10 | 12 | 12 | 12 | 12 | 14 | 14 | 14 |
| KG | 9.94 | 10.48 | 11.02 | 11.56 | 12.1 | 12.64 | 13.18 | 13.72 | 14.26 | 14.8 | 15.34 | 15.88 | 16.42 | 16.96 | 17.5 | 18.04 | 18.58 | 19.12 | 19.66 | 20.2 |

# GETH14
## Single Axis
## Motor at Bottom

### BM Motor at Bottom

2D CAD 3D CAD • CAD Download : www.gmtlinear.com •

(Unit:mm)

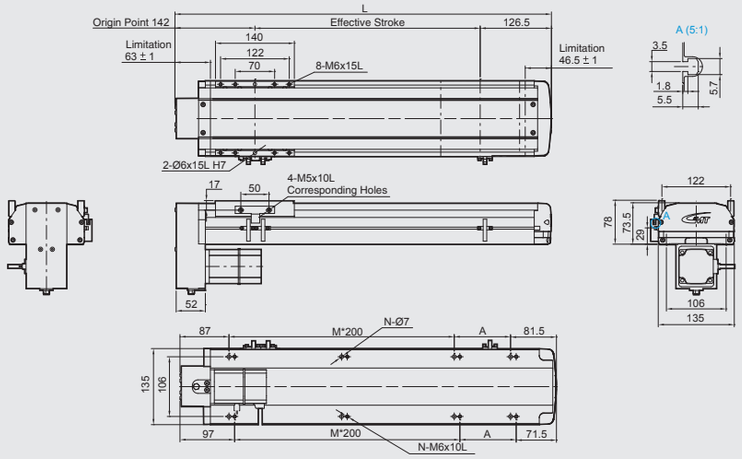


| Stroke | 100 | 150 | 200 | 250 | 300 | 350 | 400 | 450 | 500 | 550 | 600 | 650 | 700 | 750 | 800 | 850 | 900 | 950 | 1000 | 1050 |
|---|---|---|---|---|---|---|---|---|---|---|---|---|---|---|---|---|---|---|---|---|
| L | 368.5 | 418.5 | 468.5 | 518.5 | 568.5 | 618.5 | 668.5 | 718.5 | 768.5 | 818.5 | 868.5 | 918.5 | 968.5 | 1018.5 | 1068.5 | 1118.5 | 1168.5 | 1218.5 | 1268.5 | 1318.5 |
| A | 200 | 50 | 100 | 150 | 200 | 50 | 100 | 150 | 200 | 50 | 100 | 150 | 200 | 50 | 100 | 150 | 200 | 50 | 100 | 150 |
| M | 0 | 1 | 1 | 1 | 1 | 2 | 2 | 2 | 2 | 3 | 3 | 3 | 3 | 4 | 4 | 4 | 4 | 5 | 5 | 5 |
| N | 4 | 6 | 6 | 6 | 6 | 8 | 8 | 8 | 8 | 10 | 10 | 10 | 10 | 12 | 12 | 12 | 12 | 14 | 14 | 14 |
| KG | 9.94 | 10.48 | 11.02 | 11.56 | 12.1 | 12.64 | 13.18 | 13.72 | 14.26 | 14.8 | 15.34 | 15.88 | 16.42 | 16.96 | 17.5 | 18.04 | 18.58 | 19.12 | 19.66 | 20.2 |

# GETH17
## Single Axis
## Ball Screw Driven



Maximum Stroke 1250 mm | Maximum Speed 2000 mm/s | Motor Output 400W | Ball Screw Ø20 mm | Linear Guide 20X15-2 Pc

## Ordering Method

GETH17 - L 5 - 100 - BC - M40B - C 4 - 0001

Model

Special Order No.

**Ball Screw**

| | |
|---|---|
| L | Standard-MIT |

**Stroke**

100-1250 mm
50 Pitch

**Ball Screw Lead**

| | |
|---|---|
| 05 | 05 mm |
| 10 | 10 mm |
| 20 | 20 mm |
| 40 | 40 mm |

**Motor Position**

| | |
|---|---|
| M | In-Line Motor Built-In |
| BC | In-Line Motor |
| BM | Motor at Bottom |
| BR | Motor on Right Side |
| BL | Motor on Left Side |

**Motor Brand , Power Output**

| | | | | |
|---|---|---|---|---|
| M | Mitsubishi | 10 | - | B※ |
| P | Panasonic | 20 | - | |
| Y | Yaskawa | 40 | 400W | |
| T | Delta | 75 | - | |

※" B "means with brake.
" - "means not applicable.

**Home Sensor**

| | |
|---|---|
| Internal | |
| A | Motor Side |
| B | Opposite Motor Side |
| External | |
| C | Motor Side |
| D | Opposite Motor Side |
| Without Sensor | |
| E | Without Sensor |

**Limit Sensor**

| | |
|---|---|
| Internal | |
| 1 | 1 Pc |
| 2 | 2 Pc |
| External | |
| 3 | 1 Pc |
| 4 | 2 Pc |
| Without Sensor | |
| 5 | Without Sensor |



Motorized X-Axis ▶ Ball Screw Driven ▶ Linear Drive
GETH17
GMT GLOBAL INC.
GETH Specifications Introduction

## Specifications

| | | | | | | |
|---|---|---|---|---|---|---|
| Performance | Repeatability (mm) | | ±0.01 | | | |
| | Lead (mm) | | 5 | 10 | 20 | 40 |
| | Maximum Speed (mm / s) | | 250 | 500 | 1000 | 2000 |
| | Maximum Load | Horizontal (kg) | 120 | 110 | 75 | 35 |
| | | Vertical (kg) | 40 | 30 | 14 | 7 |
| | Rated Thrust (N) | | 1388 | 694 | 347 | 174 |
| | Stroke / Pitch (mm) | | 100-1250 mm / 50 mm Pitch | | | |
| Parts | AC Servo Motor Output (W) | | 400 | | | |
| | Ball Screw Ø (mm) | | C7Ø20 | | | |
| | High Rigidity Linear Guide (mm) | | 20X15 | | | |
| | Coupling (mm) | | 14X12 | | | |
| | Home Sensor | External | EE-SX672 (NPN) | | | |
| | | Built-In | EE-SX674 (NPN) | | | |

※Shaft runout will occur when the stroke is over 850mm, deceleration will be the best solution to execute at that moment.

## Sensor Circuit Diagram

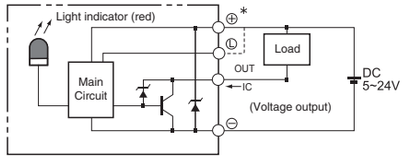


## Allowable Overhang (N.m)

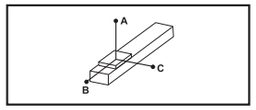


(Unit:mm)

| Horizontal Installation | | A | B | C |
|---|---|---|---|---|
| Lead 5 | 60 kg | 2980 | 435 | 577 |
| | 100 kg | 2000 | 207 | 331 |
| | 110 kg | 1846 | 202 | 269 |
| Lead 10 | 60 kg | 2440 | 428 | 570 |
| | 75 kg | 2010 | 253 | 336 |
| | 90 kg | 1851 | 207 | 274 |
| Lead 20 | 30 kg | 2652 | 899 | 994 |
| | 50 kg | 1775 | 526 | 593 |
| | 75 kg | 1396 | 317 | 267 |
| Lead 40 | 10 kg | 3545 | 2738 | 2203 |
| | 20 kg | 2545 | 1360 | 1185 |
| | 35 kg | 2640 | 664 | 739 |

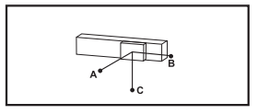


(Unit:mm)

| Wall Installation | | A | B | C |
|---|---|---|---|---|
| Lead 5 | 60 kg | 530 | 350 | 2438 |
| | 100 kg | 277 | 165 | 1995 |
| | 110 kg | 215 | 118 | 1836 |
| Lead 10 | 60 kg | 533 | 353 | 2441 |
| | 75 kg | 293 | 179 | 2010 |
| | 90 kg | 230 | 133 | 1851 |
| Lead 20 | 30 kg | 982 | 815 | 2573 |
| | 50 kg | 569 | 442 | 1680 |
| | 75 kg | 337 | 232 | 1258 |
| Lead 40 | 10 kg | 2020 | 2071 | 3500 |
| | 20 kg | 1200 | 1281 | 2480 |
| | 35 kg | 755 | 591 | 2518 |

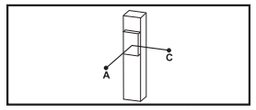


(Unit:mm)

| Vertical Installation | | A | C |
|---|---|---|---|
| Lead 5 | 20 kg | 1510 | 1220 |
| | 30 kg | 1210 | 990 |
| | 40 kg | 992 | 962 |
| Lead 10 | 15 kg | 1778 | 1778 |
| | 25 kg | 1050 | 1050 |
| | 30 kg | 750 | 750 |
| Lead 20 | 5 kg | 1700 | 1700 |
| | 10 kg | 2202 | 2202 |
| | 14 kg | 1485 | 1485 |
| Lead 40 | 7 kg | 650 | 650 |
| | - | - | - |
| | - | - | - |

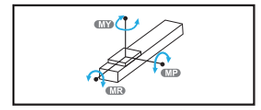


(Unit:N.m)

| Static Loading Moment | |
|---|---|
| MY | 1032 |
| MP | 1034 |
| MR | 908 |

## Servo Motor Options

| Brand | Mark | Brake | Motor Output | AC-Voltage | Motor Model | Driver Model |
|---|---|---|---|---|---|---|
| Mitsubishi | M | Without Brake (Horizontal Type) | 400 | 220 | HF-KP43 | MR-J3-40A |
| | | With Brake (Vertical Type) | 400 | 220 | HF-KP43B | MR-J3-40A |
| Panasonic | P | Without Brake (Horizontal Type) | 400 | 220 | MHMD042P1S | MADDT2210 |
| | | With Brake (Vertical Type) | 400 | 220 | MHMD042P1T | MADDT2210 |
| Delta | T | Without Brake (Horizontal Type) | 400 | 220 | ECMA-C20604ES | ASD-B20421-B |
| | | With Brake (Vertical Type) | 400 | 220 | ECMA-C20604FS | ASD-B20421-B |

# GETH17
## Single Axis
## In-Line Motor / Motor at Bottom

### BC In-Line Motor

(Unit:mm)

2D CAD 3D CAD • CAD Download : www.gmtlinear.com •

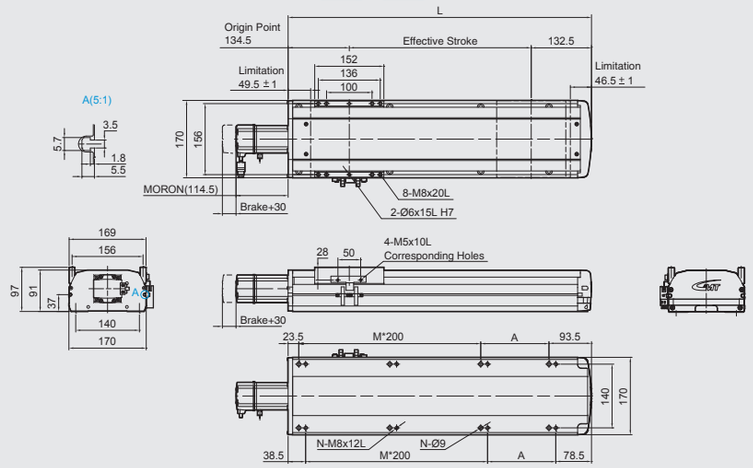


| Stroke | 100 | 150 | 200 | 250 | 300 | 350 | 400 | 450 | 500 | 550 | 600 | 650 | 700 | 750 | 800 | 850 | 900 | 950 | 1000 | 1050 | 1100 | 1150 | 1200 | 1250 |
|---|---|---|---|---|---|---|---|---|---|---|---|---|---|---|---|---|---|---|---|---|---|---|---|---|
| L | 367 | 417 | 467 | 517 | 567 | 617 | 667 | 717 | 767 | 817 | 867 | 917 | 967 | 1017 | 1067 | 1117 | 1167 | 1217 | 1267 | 1317 | 1367 | 1417 | 1467 | 1517 |
| A | 50 | 100 | 150 | 200 | 50 | 100 | 150 | 200 | 50 | 100 | 150 | 200 | 50 | 100 | 150 | 200 | 50 | 100 | 150 | 200 | 50 | 100 | 150 | 200 |
| M | 1 | 1 | 1 | 1 | 2 | 2 | 2 | 2 | 3 | 3 | 3 | 3 | 4 | 4 | 4 | 4 | 5 | 5 | 5 | 5 | 6 | 6 | 6 | 6 |
| N | 6 | 6 | 6 | 6 | 8 | 8 | 8 | 8 | 10 | 10 | 10 | 10 | 12 | 12 | 12 | 12 | 14 | 14 | 14 | 14 | 16 | 16 | 16 | 16 |
| KG | 10.02 | 10.79 | 11.57 | 12.34 | 13.11 | 13.88 | 14.65 | 15.42 | 16.19 | 16.96 | 17.73 | 18.5 | 19.28 | 20.05 | 20.82 | 21.59 | 22.36 | 23.13 | 23.9 | 24.67 | 25.44 | 26.21 | 26.98 | 27.75 |

### M Motor at Bottom

(Unit:mm)

2D CAD 3D CAD • CAD Download : www.gmtlinear.com •

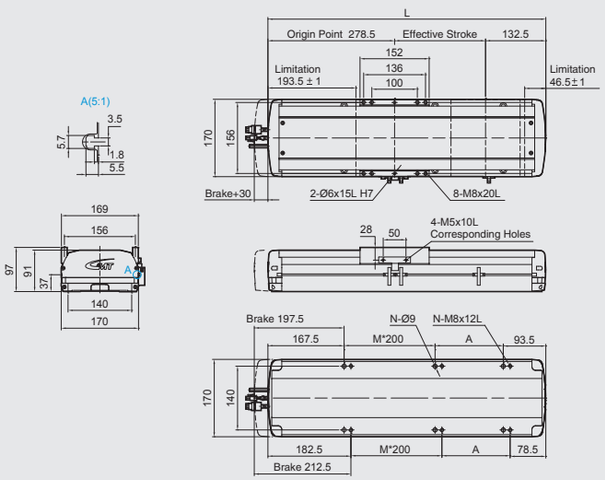


| Stroke | 100 | 150 | 200 | 250 | 300 | 350 | 400 | 450 | 500 | 550 | 600 | 650 | 700 | 750 | 800 | 850 | 900 | 950 | 1000 | 1050 | 1100 | 1150 | 1200 | 1250 |
|---|---|---|---|---|---|---|---|---|---|---|---|---|---|---|---|---|---|---|---|---|---|---|---|---|
| L | 511 | 561 | 611 | 661 | 711 | 761 | 811 | 861 | 911 | 961 | 1011 | 1061 | 1111 | 1161 | 1211 | 1261 | 1311 | 1361 | 1411 | 1461 | 1511 | 1561 | 1611 | 1661 |
| A | 50 | 100 | 150 | 200 | 50 | 100 | 150 | 200 | 50 | 100 | 150 | 200 | 50 | 100 | 150 | 200 | 50 | 100 | 150 | 200 | 50 | 100 | 150 | 200 |
| M | 1 | 1 | 1 | 1 | 2 | 2 | 2 | 2 | 3 | 3 | 3 | 3 | 4 | 4 | 4 | 4 | 5 | 5 | 5 | 5 | 6 | 6 | 6 | 6 |
| N | 6 | 6 | 6 | 6 | 8 | 8 | 8 | 8 | 10 | 10 | 10 | 10 | 12 | 12 | 12 | 12 | 14 | 14 | 14 | 14 | 16 | 16 | 16 | 16 |
| KG | 10.89 | 11.67 | 12.45 | 13.22 | 14 | 14.78 | 15.55 | 16.33 | 17.11 | 17.88 | 18.66 | 19.44 | 20.22 | 20.99 | 21.77 | 22.55 | 23.33 | 24.10 | 24.88 | 25.66 | 26.44 | 27.21 | 27.99 | 28.77 |





# GETH17
## Single Axis
## Motor on Left Side / Motor on Right Side

### BL Motor on Left Side

(Unit:mm)

2D CAD 3D CAD • CAD Download : www.gmtlinear.com •

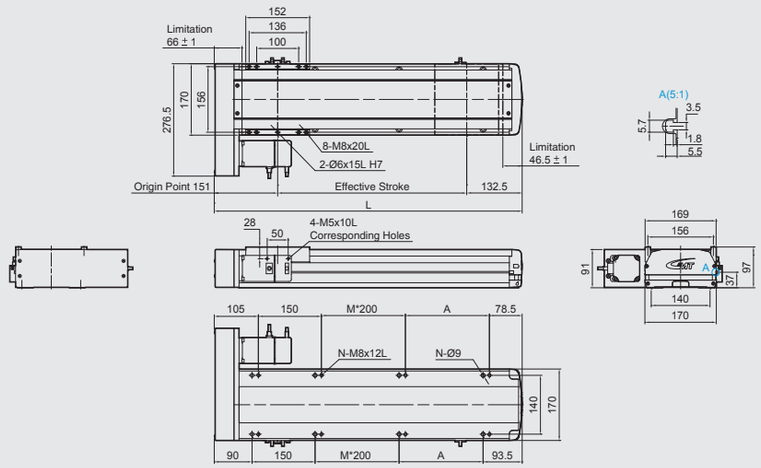


| Stroke | 100 | 150 | 200 | 250 | 300 | 350 | 400 | 450 | 500 | 550 | 600 | 650 | 700 | 750 | 800 | 850 | 900 | 950 | 1000 | 1050 | 1100 | 1150 | 1200 | 1250 |
|---|---|---|---|---|---|---|---|---|---|---|---|---|---|---|---|---|---|---|---|---|---|---|---|---|
| L | 383.5 | 433.5 | 483.5 | 533.5 | 583.5 | 633.5 | 683.5 | 733.5 | 783.5 | 833.5 | 883.5 | 933.5 | 983.5 | 1033.5 | 1083.5 | 1133.5 | 1183.5 | 1233.5 | 1283.5 | 1333.5 | 1383.5 | 1433.5 | 1483.5 | 1533.5 |
| A | 50 | 100 | 150 | 200 | 50 | 100 | 150 | 200 | 50 | 100 | 150 | 200 | 50 | 100 | 150 | 200 | 50 | 100 | 150 | 200 | 50 | 100 | 150 | 200 |
| M | 0 | 0 | 0 | 0 | 1 | 1 | 1 | 1 | 2 | 2 | 2 | 2 | 3 | 3 | 3 | 3 | 4 | 4 | 4 | 4 | 5 | 5 | 5 | 5 |
| N | 6 | 6 | 6 | 6 | 8 | 8 | 8 | 8 | 10 | 10 | 10 | 10 | 12 | 12 | 12 | 12 | 14 | 14 | 14 | 14 | 16 | 16 | 16 | 16 |
| KG | 10.30 | 11.07 | 11.84 | 12.61 | 13.38 | 14.15 | 14.92 | 15.69 | 16.47 | 17.24 | 18.01 | 18.78 | 19.55 | 20.32 | 21.09 | 21.86 | 22.63 | 23.4 | 24.18 | 24.95 | 25.72 | 26.49 | 27.26 | 28.03 |

### BR Motor on Right Side

(Unit:mm)

2D CAD 3D CAD • CAD Download : www.gmtlinear.com •

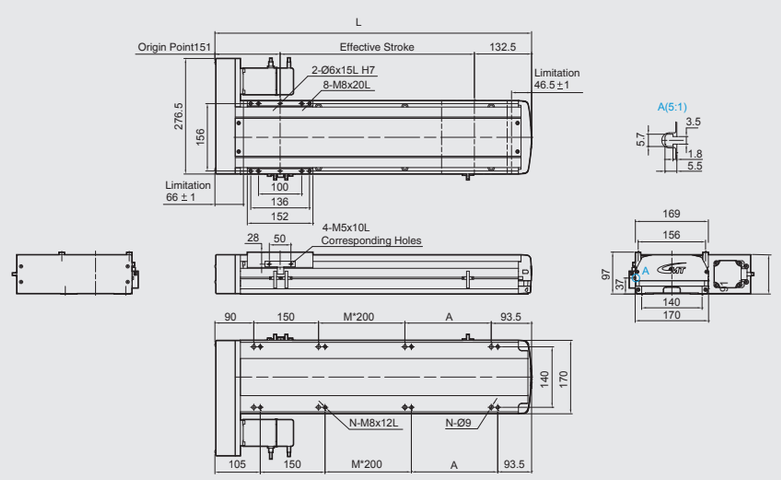


| Stroke | 100 | 150 | 200 | 250 | 300 | 350 | 400 | 450 | 500 | 550 | 600 | 650 | 700 | 750 | 800 | 850 | 900 | 950 | 1000 | 1050 | 1100 | 1150 | 1200 | 1250 |
|---|---|---|---|---|---|---|---|---|---|---|---|---|---|---|---|---|---|---|---|---|---|---|---|---|
| L | 383.5 | 433.5 | 483.5 | 533.5 | 583.5 | 633.5 | 683.5 | 733.5 | 783.5 | 833.5 | 883.5 | 933.5 | 983.5 | 1033.5 | 1083.5 | 1133.5 | 1183.5 | 1233.5 | 1283.5 | 1333.5 | 1383.5 | 1433.5 | 1483.5 | 1533.5 |
| A | 50 | 100 | 150 | 200 | 50 | 100 | 150 | 200 | 50 | 100 | 150 | 200 | 50 | 100 | 150 | 200 | 50 | 100 | 150 | 200 | 50 | 100 | 150 | 200 |
| M | 0 | 0 | 0 | 0 | 1 | 1 | 1 | 1 | 2 | 2 | 2 | 2 | 3 | 3 | 3 | 3 | 4 | 4 | 4 | 4 | 5 | 5 | 5 | 5 |
| N | 6 | 6 | 6 | 6 | 8 | 8 | 8 | 8 | 10 | 10 | 10 | 10 | 12 | 12 | 12 | 12 | 14 | 14 | 14 | 14 | 16 | 16 | 16 | 16 |
| KG | 10.30 | 11.07 | 11.84 | 12.61 | 13.38 | 14.15 | 14.92 | 15.69 | 16.47 | 17.24 | 18.01 | 18.78 | 19.55 | 20.32 | 21.09 | 21.86 | 22.63 | 23.4 | 24.18 | 24.95 | 25.72 | 26.49 | 27.26 | 28.03 |

# GETH17
## Single Axis
## Motor at Bottom

(Unit:mm)

### BM Motor at Bottom

2D CAD 3D CAD • CAD Download : www.gmtlinear.com •

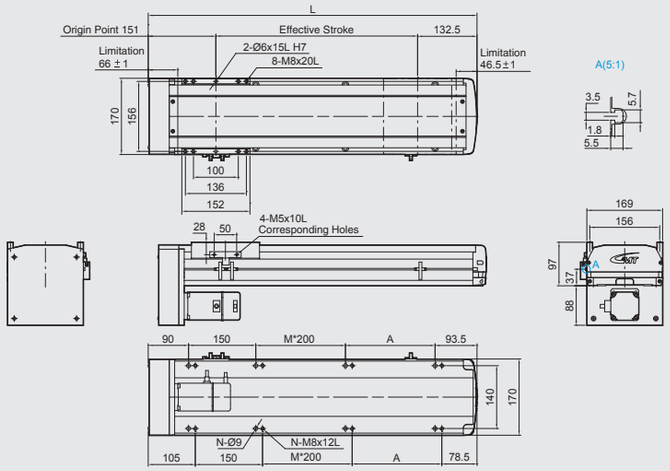


| Stroke | 100 | 150 | 200 | 250 | 300 | 350 | 400 | 450 | 500 | 550 | 600 | 650 | 700 | 750 | 800 | 850 | 900 | 950 | 1000 | 1050 | 1100 | 1150 | 1200 | 1250 |
|---|---|---|---|---|---|---|---|---|---|---|---|---|---|---|---|---|---|---|---|---|---|---|---|---|
| L | 383.5 | 433.5 | 483.5 | 533.5 | 583.5 | 633.5 | 683.5 | 733.5 | 783.5 | 833.5 | 883.5 | 933.5 | 983.5 | 1033.5 | 1083.5 | 1133.5 | 1183.5 | 1233.5 | 1283.5 | 1333.5 | 1383.5 | 1433.5 | 1483.5 | 1533.5 |
| A | 50 | 100 | 150 | 200 | 50 | 100 | 150 | 200 | 50 | 100 | 150 | 200 | 50 | 100 | 150 | 200 | 50 | 100 | 150 | 200 | 50 | 100 | 150 | 200 |
| M | 0 | 0 | 0 | 0 | 1 | 1 | 1 | 1 | 2 | 2 | 2 | 2 | 3 | 3 | 3 | 3 | 4 | 4 | 4 | 4 | 5 | 5 | 5 | 5 |
| N | 6 | 6 | 6 | 6 | 8 | 8 | 8 | 8 | 10 | 10 | 10 | 10 | 12 | 12 | 12 | 12 | 14 | 14 | 14 | 14 | 16 | 16 | 16 | 16 |
| KG | 10.30 | 11.07 | 11.84 | 12.61 | 13.38 | 14.15 | 14.92 | 15.69 | 16.47 | 17.24 | 18.01 | 18.78 | 19.55 | 20.32 | 21.09 | 21.86 | 22.63 | 23.4 | 24.18 | 24.95 | 25.72 | 26.49 | 27.26 | 28.03 |

# GETH17
## Single Axis
## Ball Screw Driven



Maximum Stroke 1250 mm | Maximum Speed 2000 mm/s | Motor Output 750W | Ball Screw Ø20 mm | Linear Guide 20X15-2Pc

## Ordering Method

GETH17 - L 5 - 100 - BC - M75B - C 4 - 0001

Model | Special Order No.

**Ball Screw**

| | |
|---|---|
| L | Standard-MIT |

**Stroke**

100-1250 mm
50 Pitch

**Ball Screw Lead**

| | |
|---|---|
| 05 | 05 mm |
| 10 | 10 mm |
| 20 | 20 mm |
| 40 | 40 mm |

**Motor Position**

| | |
|---|---|
| BC | In-Line Motor |
| BM | Motor at Bottom |
| BR | Motor on Right Side |
| BL | Motor on Left Side |

**Motor Brand , Power Output**

| | | | | |
|---|---|---|---|---|
| M | Mitsubishi | 10 | - | B※ |
| P | Panasonic | 20 | - | |
| Y | Yaskawa | 40 | - | |
| T | Delta | 75 | 750W | |

※" B "means with brake.
" - "means not applicable.

**Home Sensor**

| | |
|---|---|
| Internal | |
| A | Motor Side |
| B | Opposite Motor Side |
| External | |
| C | Motor Side |
| D | Opposite Motor Side |
| Without Sensor | |
| E | Without Sensor |

**Limit Sensor**

| | |
|---|---|
| Internal | |
| 1 | 1 Pc |
| 2 | 2 Pc |
| External | |
| 3 | 1 Pc |
| 4 | 2 Pc |
| Without Sensor | |
| 5 | Without Sensor |



Motorized X-Axis ▶ Ball Screw Driven ▶ Linear Drive
GETH17
GMT GLOBAL INC.
GETH Specifications Introduction

## Specification

| | | | | | | |
|---|---|---|---|---|---|---|
| Performance | Repeatability (mm) | | ±0.01 | | | |
| | Lead (mm) | | 5 | 10 | 20 | 40 |
| | Maximum Speed (mm / s) | | 250 | 500 | 1000 | 2000 |
| | Maximum Load | Horizontal (kg) | 120 | 120 | 83 | 50 |
| | | Vertical (kg) | 50 | 40 | 25 | 10 |
| | Rated Thrust (N) | | 2563 | 1281 | 640 | 320 |
| | Stroke / Pitch (mm) | | 100-1250 mm / 50 mm Pitch | | | |
| Parts | AC Servo Motor Output (W) | | 750 | | | |
| | Ball Screw Ø (mm) | | C7Ø20 | | | |
| | High Rigidity Linear Guide (mm) | | 20X15 | | | |
| | Coupling (mm) | | 19X12 | | | |
| | Home Sensor | External | EE-SX672 (NPN) | | | |
| | | Built-In | EE-SX674 (NPN) | | | |

※Shaft runout will occur when the stroke is over 850mm, deceleration will be the best solution to execute at that moment.

## Sensor Circuit Diagram

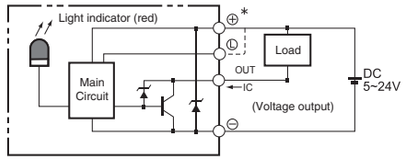


## Allowable Overhang (N.m)

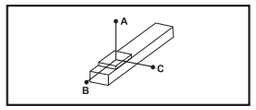


(Unit:mm)

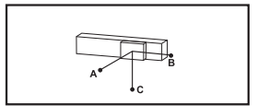


(Unit:mm)

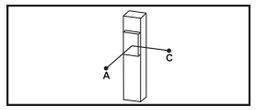


(Unit:mm)

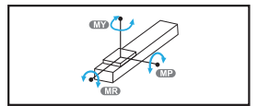


(Unit:N.m)

| Horizontal Installation | | A | B | C |
|---|---|---|---|---|
| Lead5 | 60kg | 2980 | 435 | 577 |
| | 100kg | 2000 | 207 | 331 |
| | 120kg | 1846 | 202 | 269 |
| Lead 10 | 60kg | 2440 | 428 | 570 |
| | 75kg | 2010 | 253 | 336 |
| | 95kg | 1851 | 207 | 274 |
| Lead 20 | 30kg | 2652 | 899 | 994 |
| | 50kg | 1775 | 526 | 593 |
| | 83kg | 1396 | 317 | 267 |
| Lead 40 | 10kg | 3545 | 2738 | 2203 |
| | 30kg | 2545 | 1360 | 1185 |
| | 50kg | 2640 | 664 | 739 |

| Wall Installation | | A | B | C |
|---|---|---|---|---|
| Lead5 | 60kg | 530 | 350 | 2438 |
| | 100kg | 277 | 165 | 1995 |
| | 120kg | 215 | 118 | 1836 |
| Lead 10 | 60kg | 533 | 353 | 2441 |
| | 75kg | 293 | 179 | 2010 |
| | 95kg | 230 | 133 | 1851 |
| Lead 20 | 30kg | 982 | 815 | 2573 |
| | 50kg | 569 | 442 | 1680 |
| | 83kg | 337 | 232 | 1258 |
| Lead 40 | 10kg | 2020 | 2071 | 3500 |
| | 30kg | 1200 | 1281 | 2480 |
| | 50kg | 755 | 591 | 2518 |

| Vertical Installation | | A | C |
|---|---|---|---|
| Lead5 | 20kg | 1510 | 1220 |
| | 30kg | 1210 | 990 |
| | 50kg | 992 | 962 |
| Lead 10 | 15kg | 1778 | 1778 |
| | 25kg | 1050 | 1050 |
| | 40kg | 750 | 750 |
| Lead 20 | 5kg | 1700 | 1700 |
| | 10kg | 2202 | 2202 |
| | 25kg | 1485 | 1485 |
| Lead 40 | 12kg | 650 | 650 |
| | - | - | - |
| | - | - | - |

| Static Loading Moment | |
|---|---|
| MY | 1032 |
| MP | 1034 |
| MR | 908 |

## Servo Motor Options

| Brand | Mark | Brake | Motor Output | AC-Voltage | Motor Model | Driver Model |
|---|---|---|---|---|---|---|
| Mitsubishi | M | Without Brake (Horizontal Type) | 750 | 220 | HF-KP73 | MR-J3-70A |
| | | With Brake (Vertical Type) | 750 | 220 | HF-KP73B | MR-J3-70A |
| Panasonic | P | Without Brake (Horizontal Type) | 750 | 220 | MHMD082P1S | MADDT3520 |
| | | With Brake (Vertical Type) | 750 | 220 | MHMD082P1T | MADDT3520 |
| Delta | T | Without Brake (Horizontal Type) | 750 | 220 | ECMA-C20807ES | ASD-B20721-B |
| | | With Brake (Vertical Type) | 750 | 220 | ECMA-C20807FS | ASD-B20721-B |

# GETH17
## Single Axis
## In-Line Motor / Motor at Bottom

### BC In-Line Motor

(Unit:mm)

2D CAD 3D CAD • CAD Download : www.gmtlinear.com •

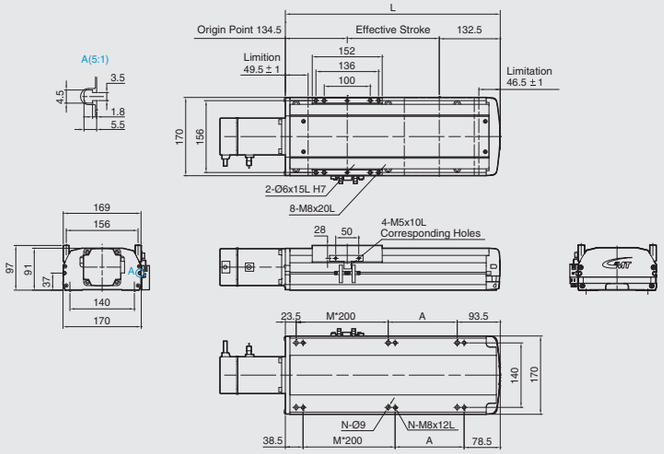


| Stroke | 100 | 150 | 200 | 250 | 300 | 350 | 400 | 450 | 500 | 550 | 600 | 650 | 700 | 750 | 800 | 850 | 900 | 950 | 1000 | 1050 | 1100 | 1150 | 1200 | 1250 |
|---|---|---|---|---|---|---|---|---|---|---|---|---|---|---|---|---|---|---|---|---|---|---|---|---|
| L | 367 | 417 | 467 | 517 | 567 | 617 | 667 | 717 | 767 | 817 | 867 | 917 | 967 | 1017 | 1067 | 1117 | 1167 | 1217 | 1267 | 1317 | 1367 | 1417 | 1467 | 1517 |
| A | 50 | 100 | 150 | 200 | 50 | 100 | 150 | 200 | 50 | 100 | 150 | 200 | 50 | 100 | 150 | 200 | 50 | 100 | 150 | 200 | 50 | 100 | 150 | 200 |
| M | 1 | 1 | 1 | 1 | 2 | 2 | 2 | 2 | 3 | 3 | 3 | 3 | 4 | 4 | 4 | 4 | 5 | 5 | 5 | 5 | 6 | 6 | 6 | 6 |
| N | 6 | 6 | 6 | 6 | 8 | 8 | 8 | 8 | 10 | 10 | 10 | 10 | 12 | 12 | 12 | 12 | 14 | 14 | 14 | 14 | 16 | 16 | 16 | 16 |
| KG | 10.02 | 10.79 | 11.57 | 12.34 | 13.11 | 13.88 | 14.65 | 15.42 | 16.19 | 16.96 | 17.73 | 18.5 | 19.28 | 20.05 | 20.82 | 21.59 | 22.36 | 23.13 | 23.9 | 24.67 | 25.44 | 26.21 | 26.98 | 27.75 |

### BM Motor at Bottom

(Unit:mm)

2D CAD 3D CAD • CAD Download : www.gmtlinear.com •

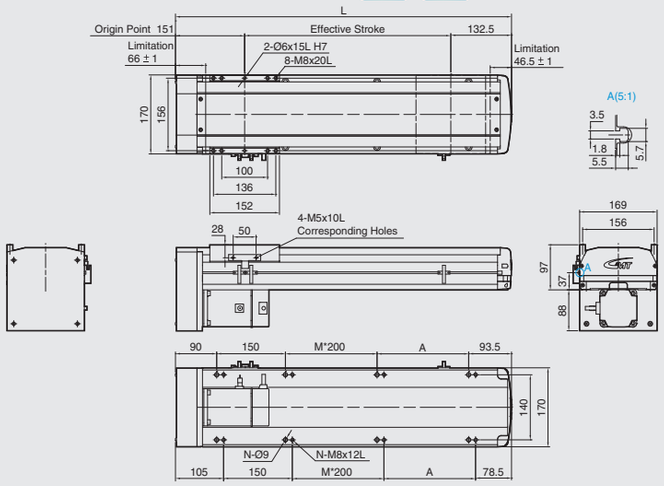


| Stroke | 100 | 150 | 200 | 250 | 300 | 350 | 400 | 450 | 500 | 550 | 600 | 650 | 700 | 750 | 800 | 850 | 900 | 950 | 1000 | 1050 | 1100 | 1150 | 1200 | 1250 |
|---|---|---|---|---|---|---|---|---|---|---|---|---|---|---|---|---|---|---|---|---|---|---|---|---|
| L | 383.5 | 433.5 | 483.5 | 533.5 | 583.5 | 633.5 | 683.5 | 733.5 | 783.5 | 833.5 | 883.5 | 933.5 | 983.5 | 1033.5 | 1083.5 | 1133.5 | 1183.5 | 1233.5 | 1283.5 | 1333.5 | 1383.5 | 1433.5 | 1483.5 | 1533.5 |
| A | 50 | 100 | 150 | 200 | 50 | 100 | 150 | 200 | 50 | 100 | 150 | 200 | 50 | 100 | 150 | 200 | 50 | 100 | 150 | 200 | 50 | 100 | 150 | 200 |
| M | 0 | 0 | 0 | 0 | 1 | 1 | 1 | 1 | 2 | 2 | 2 | 2 | 3 | 3 | 3 | 3 | 4 | 4 | 4 | 4 | 5 | 5 | 5 | 5 |
| N | 6 | 6 | 6 | 6 | 8 | 8 | 8 | 8 | 10 | 10 | 10 | 10 | 12 | 12 | 12 | 12 | 14 | 14 | 14 | 14 | 16 | 16 | 16 | 16 |
| KG | 10.30 | 11.07 | 11.84 | 12.61 | 13.38 | 14.15 | 14.92 | 15.69 | 16.47 | 17.24 | 18.01 | 18.78 | 19.55 | 20.32 | 21.09 | 21.86 | 22.63 | 23.4 | 24.18 | 24.95 | 25.72 | 26.49 | 27.26 | 28.03 |





# GETH17
## Single Axis
## Motor on Left Side / Motor on Right Side

### BL Motor on Left Side

(Unit:mm)

2D CAD 3D CAD • CAD Download : www.gmtlinear.com •

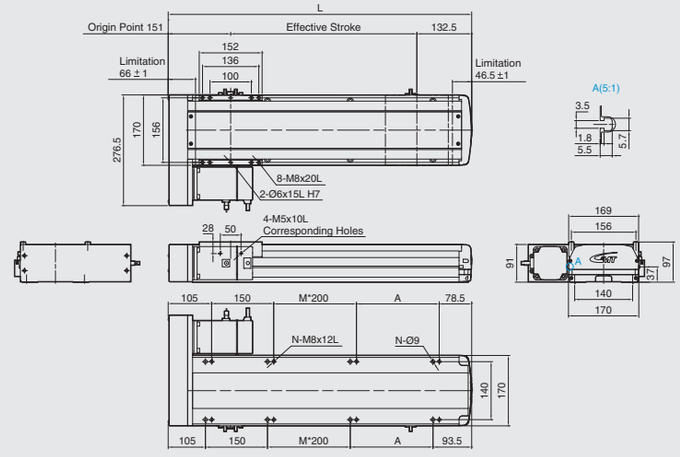


| Stroke | 100 | 150 | 200 | 250 | 300 | 350 | 400 | 450 | 500 | 550 | 600 | 650 | 700 | 750 | 800 | 850 | 900 | 950 | 1000 | 1050 | 1100 | 1150 | 1200 | 1250 |
|---|---|---|---|---|---|---|---|---|---|---|---|---|---|---|---|---|---|---|---|---|---|---|---|---|
| L | 383.5 | 433.5 | 483.5 | 533.5 | 583.5 | 633.5 | 683.5 | 733.5 | 783.5 | 833.5 | 883.5 | 933.5 | 983.5 | 1033.5 | 1083.5 | 1133.5 | 1183.5 | 1233.5 | 1283.5 | 1333.5 | 1383.5 | 1433.5 | 1483.5 | 1533.5 |
| A | 50 | 100 | 150 | 200 | 50 | 100 | 150 | 200 | 50 | 100 | 150 | 200 | 50 | 100 | 150 | 200 | 50 | 100 | 150 | 200 | 50 | 100 | 150 | 200 |
| M | 0 | 0 | 0 | 0 | 1 | 1 | 1 | 1 | 2 | 2 | 2 | 2 | 3 | 3 | 3 | 3 | 4 | 4 | 4 | 4 | 5 | 5 | 5 | 5 |
| N | 6 | 6 | 6 | 6 | 8 | 8 | 8 | 8 | 10 | 10 | 10 | 10 | 12 | 12 | 12 | 12 | 14 | 14 | 14 | 14 | 16 | 16 | 16 | 16 |
| KG | 10.30 | 11.07 | 11.84 | 12.61 | 13.38 | 14.15 | 14.92 | 15.69 | 16.47 | 17.24 | 18.01 | 18.78 | 19.55 | 20.32 | 21.09 | 21.86 | 22.63 | 23.4 | 24.18 | 24.95 | 25.72 | 26.49 | 27.26 | 28.03 |

### BR Motor on Right Side

(Unit:mm)

2D CAD 3D CAD • CAD Download : www.gmtlinear.com •

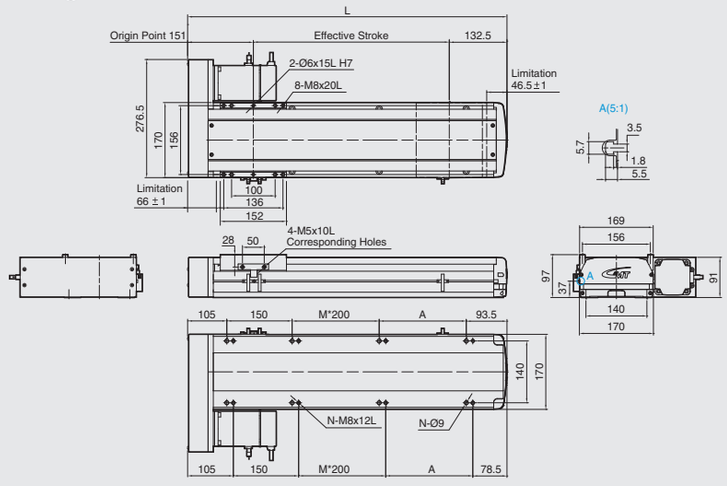


| Stroke | 100 | 150 | 200 | 250 | 300 | 350 | 400 | 450 | 500 | 550 | 600 | 650 | 700 | 750 | 800 | 850 | 900 | 950 | 1000 | 1050 | 1100 | 1150 | 1200 | 1250 |
|---|---|---|---|---|---|---|---|---|---|---|---|---|---|---|---|---|---|---|---|---|---|---|---|---|
| L | 383.5 | 433.5 | 483.5 | 533.5 | 583.5 | 633.5 | 683.5 | 733.5 | 783.5 | 833.5 | 883.5 | 933.5 | 983.5 | 1033.5 | 1083.5 | 1133.5 | 1183.5 | 1233.5 | 1283.5 | 1333.5 | 1383.5 | 1433.5 | 1483.5 | 1533.5 |
| A | 50 | 100 | 150 | 200 | 50 | 100 | 150 | 200 | 50 | 100 | 150 | 200 | 50 | 100 | 150 | 200 | 50 | 100 | 150 | 200 | 50 | 100 | 150 | 200 |
| M | 0 | 0 | 0 | 0 | 1 | 1 | 1 | 1 | 2 | 2 | 2 | 2 | 3 | 3 | 3 | 3 | 4 | 4 | 4 | 4 | 5 | 5 | 5 | 5 |
| N | 6 | 6 | 6 | 6 | 8 | 8 | 8 | 8 | 10 | 10 | 10 | 10 | 12 | 12 | 12 | 12 | 14 | 14 | 14 | 14 | 16 | 16 | 16 | 16 |
| KG | 10.30 | 11.07 | 11.84 | 12.61 | 13.38 | 14.15 | 14.92 | 15.69 | 16.47 | 17.24 | 18.01 | 18.78 | 19.55 | 20.32 | 21.09 | 21.86 | 22.63 | 23.4 | 24.18 | 24.95 | 25.72 | 26.49 | 27.26 | 28.03 |

# GETH22
# Single Axis
# Ball Screw Driven



Maximum Stroke 1500 mm | Maximum Speed 2000 mm/s | Motor Output 750W | Ball Screw Ø25 mm | Linear Guide 23X18-2Pc

## Ordering Method

**GETH22 - L 5 - 100 - BC - M75B - C 4 - 0001**

- **Model**
- **Ball Screw**

| | |
|---|---|
| L | Standard-MIT |

- **Stroke**: 100-1500 mm, 50 Pitch
- **Special Order No.**
- **Ball Screw Lead**

| | |
|---|---|
| 05 | 05 mm |
| 10 | 10 mm |
| 25 | 25 mm |
| 40 | 40 mm |

- **Motor Position**

| | |
|---|---|
| M | In-Line Motor Built-In |
| BC | In-Line Motor |
| BM | Motor at Bottom |
| BR | Motor on Right Side |
| BL | Motor on Left Side |

- **Motor Brand , Power Output**

| | | | | |
|---|---|---|---|---|
| M | Mitsubishi | 10 | - | B※ |
| P | Panasonic | 20 | - | |
| Y | Yaskawa | 40 | - | |
| T | Delta | 75 | 750W | |

※" B "means with brake.
" - "means not applicable.

- **Home Sensor**

| | |
|---|---|
| Internal | |
| A | Motor Side |
| B | Opposite Motor Side |
| External | |
| C | Motor Side |
| D | Opposite Motor Side |
| Without Sensor | |
| E | Without Sensor |

- **Limit Sensor**

| | |
|---|---|
| Internal | |
| 1 | 1 Pc |
| 2 | 2 Pc |
| External | |
| 3 | 1 Pc |
| 4 | 2 Pc |
| Without Sensor | |
| 5 | Without Sensor |



GMT GLOBAL INC.
Motorized X-Axis ▶ Ball Screw Driven ▶ Linear Drive
GETH22
GETH Specifications Introduction

## Specifications

| | | | | | | |
|---|---|---|---|---|---|---|
| Performance | Repeatability (mm) | | ±0.01 | | | |
| | Lead (mm) | | 5 | 10 | 25 | 40 |
| | Maximum Speed (mm / s) | | 250 | 500 | 1250 | 2000 |
| | Maximum Load | Horizontal (kg) | 150 | 150 | 120 | 60 |
| | | Vertical (kg) | 55 | 45 | 20 | 10 |
| | Rated Thrust (N) | | 2563 | 1281 | 640 | 320 |
| | Stroke / Pitch (mm) | | 100-1500 mm / 50 mm Pitch | | | |
| Parts | AC Servo Motor Output (W) | | 750 | | | |
| | Ball Screw Ø (mm) | | C7Ø25 | C7Ø25 | C7Ø25 | C7Ø20 |
| | High Rigidity Linear Guide (mm) | | 23X18 | | | |
| | Coupling (mm) | | 19X17 | | | 19X12 |
| | Home Sensor | External | EE-SX672 (NPN) | | | |
| | | Built-In | EE-SX674 (NPN) | | | |

※Shaft runout will occur when the stroke is over 850mm, deceleration will be the best solution to execute at that moment.

## Sensor Circuit Diagram

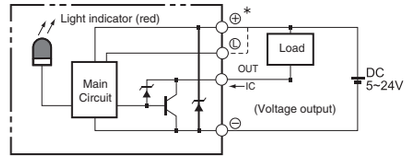


## Allowable Overhang (N.m)

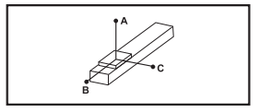


(Unit:mm)

| Horizontal Installation | | A | B | C |
|---|---|---|---|---|
| Lead 5 | 60 kg | 3672 | 653 | 866 |
| | 100 kg | 3000 | 370 | 497 |
| | 150 kg | 2493 | 273 | 363 |
| Lead 10 | 60 kg | 2652 | 899 | 994 |
| | 100 kg | 1775 | 526 | 593 |
| | 150 kg | 1396 | 317 | 267 |
| Lead 25 | 50 kg | 2862 | 956 | 1191 |
| | 80 kg | 2412 | 581 | 773 |
| | 120 kg | 2025 | 373 | 556 |
| Lead 40 | 10 kg | 4010 | 4010 | 3460 |
| | 30 kg | 3011 | 2003 | 1911 |
| | 60 kg | 2453 | 730 | 980 |

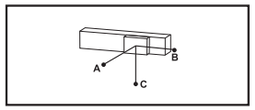


(Unit:mm)

| Wall Installation | | A | B | C |
|---|---|---|---|---|
| Lead 5 | 60 kg | 795 | 525 | 3657 |
| | 100 kg | 416 | 248 | 2993 |
| | 150 kg | 290 | 159 | 2479 |
| Lead 10 | 60 kg | 982 | 815 | 2573 |
| | 100 kg | 569 | 442 | 1680 |
| | 150 kg | 337 | 232 | 1258 |
| Lead 25 | 50 kg | 1207 | 879 | 2862 |
| | 80 kg | 779 | 504 | 2412 |
| | 120 kg | 515 | 295 | 2025 |
| Lead 40 | 10 kg | 3057 | 4113 | 4113 |
| | 30 kg | 2112 | 2108 | 3387 |
| | 60 kg | 1020 | 668 | 2461 |

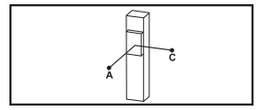


(Unit:mm)

| Vertical Installation | | A | C |
|---|---|---|---|
| Lead 5 | 30 kg | 2688 | 2688 |
| | 50 kg | 1893 | 1893 |
| | 70 kg | 1640 | 1640 |
| Lead 10 | 20 kg | 2297 | 2297 |
| | 30 kg | 1518 | 1518 |
| | 45 kg | 999 | 999 |
| Lead 25 | 15 kg | 2767 | 2767 |
| | 20 kg | 2100 | 2100 |
| | 25 kg | 1702 | 1702 |
| Lead 40 | - | - | - |
| | - | - | - |
| | - | - | - |

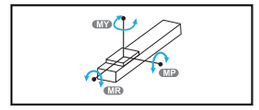


(Unit:N.m)

| Static Loading Moment | |
|---|---|
| MY | 2052 |
| MP | 2052 |
| MR | 1810 |

## Servo Motor Options

| Brand | Mark | Brake | Motor Output | AC-Voltage | Motor Model | Driver Model |
|---|---|---|---|---|---|---|
| Mitsubishi | M | Without Brake (Horizontal Type) | 750 | 220 | HF-KP73 | MR-J3-70A |
| | | With Brake (Vertical Type) | 750 | 220 | HF-KP73B | MR-J3-70A |
| Panasonic | P | Without Brake (Horizontal Type) | 750 | 220 | MHMD082P1S | MADDT3520 |
| | | With Brake (Vertical Type) | 750 | 220 | MHMD082P1T | MADDT3520 |
| Delta | T | Without Brake (Horizontal Type) | 750 | 220 | ECMA-C20807ES | ASD-B20721-B |
| | | With Brake (Vertical Type) | 750 | 220 | ECMA-C20807FS | ASD-B20721-B |

# GETH22
## Single Axis
## In-Line Motor / In-Line Motor Built-In

### BC In-Line Motor

2D CAD 3D CAD • CAD Download : www.gmtlinear.com •

(Unit:mm)

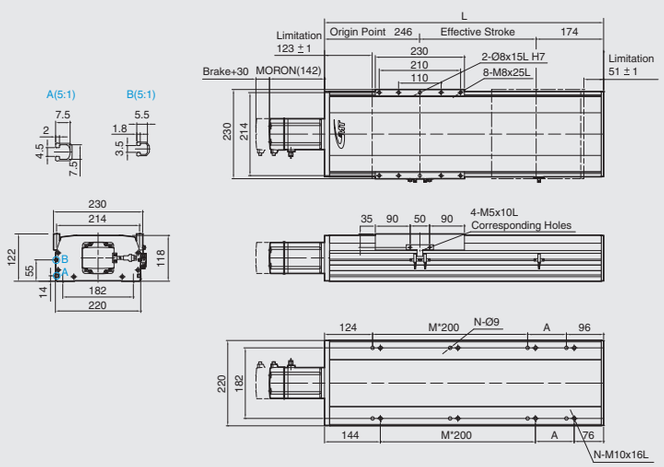


| Stroke | 100 | 150 | 200 | 250 | 300 | 350 | 400 | 450 | 500 | 550 | 600 | 650 | 700 | 750 | 800 | 850 | 900 | 950 | 1000 | 1050 | 1100 | 1150 | 1200 | 1250 | 1300 | 1350 | 1400 | 1450 | 1500 |
|---|---|---|---|---|---|---|---|---|---|---|---|---|---|---|---|---|---|---|---|---|---|---|---|---|---|---|---|---|---|
| L | 520 | 570 | 620 | 670 | 720 | 770 | 820 | 870 | 920 | 970 | 1020 | 1070 | 1120 | 1170 | 1220 | 1270 | 1320 | 1370 | 1420 | 1470 | 1520 | 1570 | 1620 | 1670 | 1720 | 1770 | 1820 | 1870 | 1920 |
| A | 100 | 150 | 200 | 50 | 100 | 150 | 200 | 50 | 100 | 150 | 200 | 50 | 100 | 150 | 200 | 50 | 100 | 150 | 200 | 50 | 100 | 150 | 200 | 50 | 100 | 150 | 200 | 50 | 100 |
| M | 1 | 1 | 1 | 2 | 2 | 2 | 2 | 3 | 3 | 3 | 3 | 4 | 4 | 4 | 4 | 5 | 5 | 5 | 5 | 6 | 6 | 6 | 6 | 7 | 7 | 7 | 7 | 8 | 8 |
| N | 6 | 6 | 6 | 8 | 8 | 8 | 8 | 10 | 10 | 10 | 10 | 12 | 12 | 12 | 12 | 14 | 14 | 14 | 14 | 16 | 16 | 16 | 16 | 18 | 18 | 18 | 18 | 20 | 20 |
| KG | 26.86 | 28.32 | 29.78 | 31.24 | 32.7 | 34.16 | 35.62 | 37.08 | 38.54 | 40 | 41.46 | 42.92 | 44.38 | 45.84 | 47.3 | 48.76 | 50.22 | 51.68 | 53.14 | 54.6 | 56.06 | 57.52 | 58.98 | 60.44 | 61.9 | 63.36 | 64.82 | 66.28 | 67.74 |

### M In-Line Motor Built-In

2D CAD 3D CAD • CAD Download : www.gmtlinear.com •

(Unit:mm)

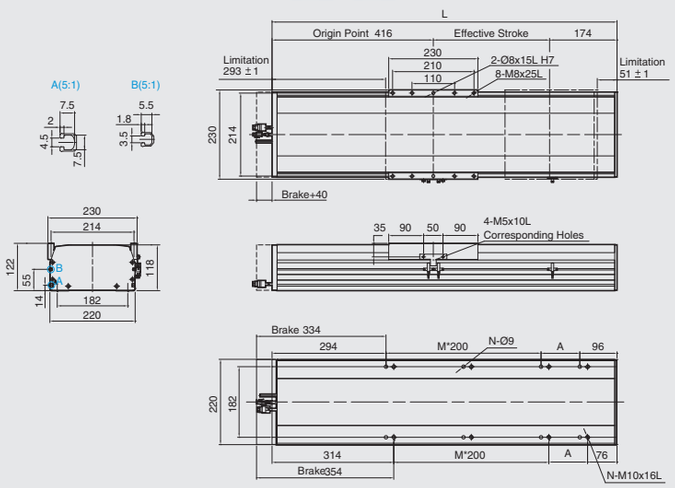


| Stroke | 100 | 150 | 200 | 250 | 300 | 350 | 400 | 450 | 500 | 550 | 600 | 650 | 700 | 750 | 800 | 850 | 900 | 950 | 1000 | 1050 | 1100 | 1150 | 1200 | 1250 | 1300 | 1350 | 1400 | 1450 | 1500 |
|---|---|---|---|---|---|---|---|---|---|---|---|---|---|---|---|---|---|---|---|---|---|---|---|---|---|---|---|---|---|
| L | 690 | 740 | 790 | 840 | 890 | 940 | 990 | 1040 | 1090 | 1140 | 1190 | 1240 | 1290 | 1340 | 1390 | 1440 | 1490 | 1540 | 1590 | 1640 | 1690 | 1740 | 1790 | 1840 | 1890 | 1940 | 1990 | 2040 | 2090 |
| A | 100 | 150 | 200 | 50 | 100 | 150 | 200 | 50 | 100 | 150 | 200 | 50 | 100 | 150 | 200 | 50 | 100 | 150 | 200 | 50 | 100 | 150 | 200 | 50 | 100 | 150 | 200 | 50 | 100 |
| M | 1 | 1 | 1 | 2 | 2 | 2 | 2 | 3 | 3 | 3 | 3 | 4 | 4 | 4 | 4 | 5 | 5 | 5 | 5 | 6 | 6 | 6 | 6 | 7 | 7 | 7 | 7 | 8 | 8 |
| N | 6 | 6 | 6 | 8 | 8 | 8 | 8 | 10 | 10 | 10 | 10 | 12 | 12 | 12 | 12 | 14 | 14 | 14 | 14 | 16 | 16 | 16 | 16 | 18 | 18 | 18 | 18 | 20 | 20 |
| KG | 29.32 | 30.79 | 32.26 | 33.73 | 35.2 | 36.67 | 38.14 | 39.61 | 41.08 | 42.55 | 44.02 | 45.49 | 46.96 | 48.43 | 49.9 | 51.37 | 52.84 | 54.31 | 55.78 | 57.25 | 58.72 | 60.19 | 61.66 | 63.13 | 64.6 | 66.07 | 67.54 | 69.01 | 70.48 |





# GETH22
## Single Axis
## Motor on Left Side / Motor on Right Side

### BL Motor on Left Side

2D CAD 3D CAD • CAD Download : www.gmtlinear.com •

(Unit:mm)

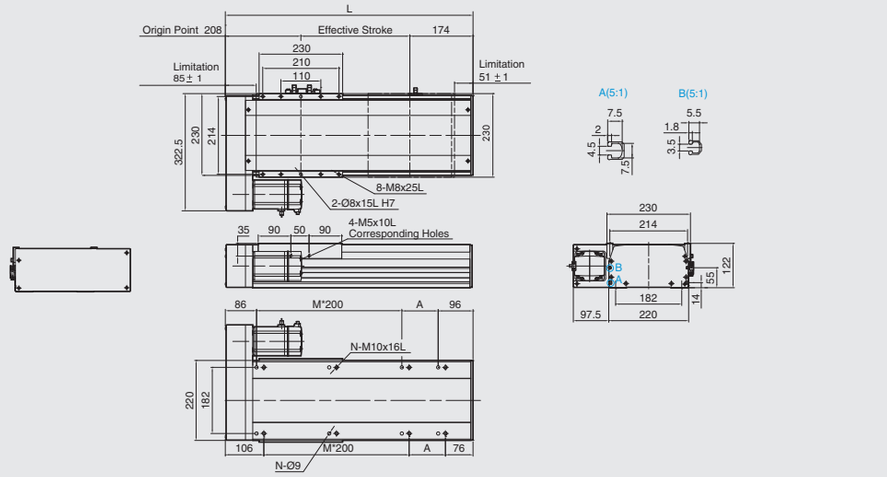


| Stroke | 100 | 150 | 200 | 250 | 300 | 350 | 400 | 450 | 500 | 550 | 600 | 650 | 700 | 750 | 800 | 850 | 900 | 950 | 1000 | 1050 | 1100 | 1150 | 1200 | 1250 | 1300 | 1350 | 1400 | 1450 | 1500 |
|---|---|---|---|---|---|---|---|---|---|---|---|---|---|---|---|---|---|---|---|---|---|---|---|---|---|---|---|---|---|
| L | 482 | 532 | 582 | 632 | 682 | 732 | 782 | 832 | 882 | 932 | 982 | 1032 | 1082 | 1132 | 1182 | 1232 | 1282 | 1332 | 1382 | 1432 | 1482 | 1532 | 1582 | 1632 | 1682 | 1732 | 1782 | 1832 | 1882 |
| A | 100 | 150 | 200 | 50 | 100 | 150 | 200 | 50 | 100 | 150 | 200 | 50 | 100 | 150 | 200 | 50 | 100 | 150 | 200 | 50 | 100 | 150 | 200 | 50 | 100 | 150 | 200 | 50 | 100 |
| M | 1 | 1 | 1 | 2 | 2 | 2 | 2 | 3 | 3 | 3 | 3 | 4 | 4 | 4 | 4 | 5 | 5 | 5 | 5 | 6 | 6 | 6 | 6 | 7 | 7 | 7 | 7 | 8 | 8 |
| N | 6 | 6 | 6 | 8 | 8 | 8 | 8 | 10 | 10 | 10 | 10 | 12 | 12 | 12 | 12 | 14 | 14 | 14 | 14 | 16 | 16 | 16 | 16 | 18 | 18 | 18 | 18 | 20 | 20 |
| KG | 25.66 | 27.12 | 28.58 | 30.04 | 31.5 | 32.96 | 34.42 | 35.88 | 37.34 | 38.8 | 40.26 | 41.72 | 43.18 | 44.64 | 46.1 | 47.56 | 49.02 | 50.48 | 51.94 | 53.4 | 54.86 | 56.32 | 57.78 | 59.24 | 60.7 | 62.16 | 63.62 | 65.08 | 66.54 |

### BR Motor on Rigth Side

2D CAD 3D CAD • CAD Download : www.gmtlinear.com •

(Unit:mm)

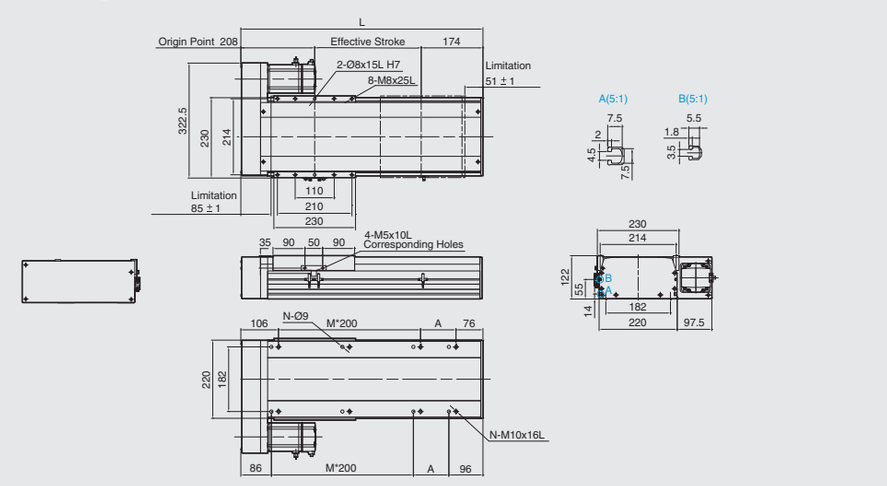


| Stroke | 100 | 150 | 200 | 250 | 300 | 350 | 400 | 450 | 500 | 550 | 600 | 650 | 700 | 750 | 800 | 850 | 900 | 950 | 1000 | 1050 | 1100 | 1150 | 1200 | 1250 | 1300 | 1350 | 1400 | 1450 | 1500 |
|---|---|---|---|---|---|---|---|---|---|---|---|---|---|---|---|---|---|---|---|---|---|---|---|---|---|---|---|---|---|
| L | 482 | 532 | 582 | 632 | 682 | 732 | 782 | 832 | 882 | 932 | 982 | 1032 | 1082 | 1132 | 1182 | 1232 | 1282 | 1332 | 1382 | 1432 | 1482 | 1532 | 1582 | 1632 | 1682 | 1732 | 1782 | 1832 | 1882 |
| A | 100 | 150 | 200 | 50 | 100 | 150 | 200 | 50 | 100 | 150 | 200 | 50 | 100 | 150 | 200 | 50 | 100 | 150 | 200 | 50 | 100 | 150 | 200 | 50 | 100 | 150 | 200 | 50 | 100 |
| M | 1 | 1 | 1 | 2 | 2 | 2 | 2 | 3 | 3 | 3 | 3 | 4 | 4 | 4 | 4 | 5 | 5 | 5 | 5 | 6 | 6 | 6 | 6 | 7 | 7 | 7 | 7 | 8 | 8 |
| N | 6 | 6 | 6 | 8 | 8 | 8 | 8 | 10 | 10 | 10 | 10 | 12 | 12 | 12 | 12 | 14 | 14 | 14 | 14 | 16 | 16 | 16 | 16 | 18 | 18 | 18 | 18 | 20 | 20 |
| KG | 25.66 | 27.12 | 28.58 | 30.04 | 31.5 | 32.96 | 34.42 | 35.88 | 37.34 | 38.8 | 40.26 | 41.72 | 43.18 | 44.64 | 46.1 | 47.56 | 49.02 | 50.48 | 51.94 | 53.4 | 54.86 | 56.32 | 57.78 | 59.24 | 60.7 | 62.16 | 63.62 | 65.08 | 66.54 |

# GETH22
# Single Axis
# Motor at Bottom

## BM Motor at Bottom

2D CAD 3D CAD • CAD Download : www.gmtlinear.com •

(Unit:mm)

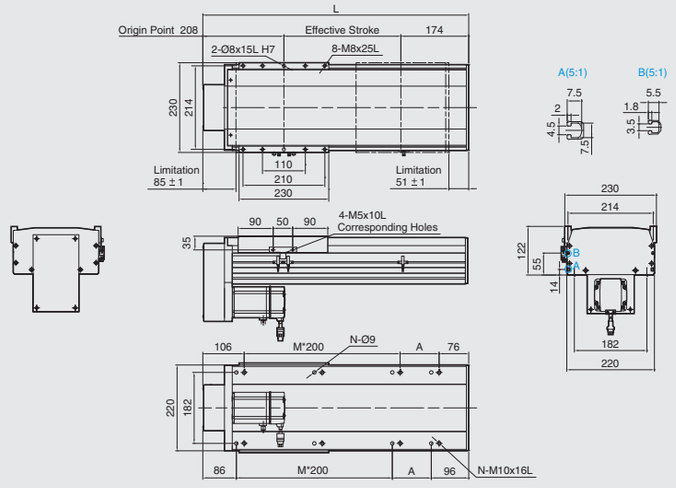


| Stroke | 100 | 150 | 200 | 250 | 300 | 350 | 400 | 450 | 500 | 550 | 600 | 650 | 700 | 750 | 800 | 850 | 900 | 950 | 1000 | 1050 | 1100 | 1150 | 1200 | 1250 | 1300 | 1350 | 1400 | 1450 | 1500 |
|---|---|---|---|---|---|---|---|---|---|---|---|---|---|---|---|---|---|---|---|---|---|---|---|---|---|---|---|---|---|
| L | 482 | 532 | 582 | 632 | 682 | 732 | 782 | 832 | 882 | 932 | 982 | 1032 | 1082 | 1132 | 1182 | 1232 | 1282 | 1332 | 1382 | 1432 | 1482 | 1532 | 1582 | 1632 | 1682 | 1732 | 1782 | 1832 | 1882 |
| A | 100 | 150 | 200 | 50 | 100 | 150 | 200 | 50 | 100 | 150 | 200 | 50 | 100 | 150 | 200 | 50 | 100 | 150 | 200 | 50 | 100 | 150 | 200 | 50 | 100 | 150 | 200 | 50 | 100 |
| M | 1 | 1 | 1 | 2 | 2 | 2 | 2 | 3 | 3 | 3 | 3 | 4 | 4 | 4 | 4 | 5 | 5 | 5 | 5 | 6 | 6 | 6 | 6 | 7 | 7 | 7 | 7 | 8 | 8 |
| N | 6 | 6 | 6 | 8 | 8 | 8 | 8 | 10 | 10 | 10 | 10 | 12 | 12 | 12 | 12 | 14 | 14 | 14 | 14 | 16 | 16 | 16 | 16 | 18 | 18 | 18 | 18 | 20 | 20 |
| KG | 25.66 | 27.12 | 28.58 | 30.04 | 31.5 | 32.96 | 34.42 | 35.88 | 37.34 | 38.8 | 40.26 | 41.72 | 43.18 | 44.64 | 46.1 | 47.56 | 49.02 | 50.48 | 51.94 | 53.4 | 54.86 | 56.32 | 57.78 | 59.24 | 60.7 | 62.16 | 63.62 | 65.08 | 66.54 |

# GETB10 - L 32 - 100 -

## Model

| Standard Belt | |
|---|---|
| GETB5 | Ligth Load |
| GETB6 | Light Load |
| GETB10 | Light Load |
| GETB14M | Medium Load |
| GETB17M | Medium Load |
| GETB22M | Heavy Load |

## Belt Type

| Belt Type | |
|---|---|
| L | PU Belt |
| X | Rubber Belt |

## Lead

| Standard Belt | |
|---|---|
| 32 | 32 mm |
| 40 | 40 mm |

## Stroke

| Model No. | Standard Stroke |
|---|---|
| GETB5 | 100-800 mm |
| GETB6 | 100-800 mm |
| GETB10 | 100-2550 mm |
| GETB14M | 100-3050 mm |
| GETB17M | 100-4050 mm |
| GETB22M | 100-4050 mm |



GMT GLOBAL INC.
Motorized X-Axis ▶ Belt Driven ▶ Linear Drive
Model No. Introduction
GETB Specifications Introduction

# LU - M10 - C 4 - 0001

Special Order No.

## Motor Position

| Standard Belt | |
|---|---|
| L | Motor on Left Side |
| LU | Motor on Upper Left Side |
| LD | Motor on Lower Left Side |
| R | Motor on Right Side |
| RU | Motor on Upper Right Side |
| RD | Motor on Lower Right Side |

## Motor Brand , Power Output , Brake

| Stepping Motor | | | |
|---|---|---|---|
| Motor Brand | | Frame Size | Model |
| A | Tamagawa | 42M | 2-Phase-TS3617N3E8 |
| | | 57M | 2-Phase-TS3653N1E2 |
| R | Oriental motor | 42M | PK245-01A |
| | | 57M | PK264-02A |
| S | Sanyo Denki | 42M | 2-Phase-103H5209-0440 |
| | | 57M | 2-Phase-103H7121-0140 |

| Servo Motor | | | |
|---|---|---|---|
| Motor Brand | | Power Output | |
| M | Mitsubishi | 10 | 100W |
| P | Panasonic | 20 | 200W |
| Y | Yaskawa | 40 | 400W |
| T | Delta | 75 | 750W |

## Home Sensor

| External | |
|---|---|
| C | Motor Side |
| D | Opposite Motor Side |
| Without Sensor | |
| E | Without Sensor |

## Limit Sensor

| External | |
|---|---|
| 3 | 1 Pc |
| 4 | 2 Pc |
| Without Sensor | |
| 5 | Without Sensor |

| Application Environment | Drive Mode | Model | Gearbox | Motor Output (W) | Width (mm) | Repeatability (mm) | Belt Spec | | Maximum Load (kg) | | Maximum Speed (mm/s)*1 | Stroke(mm) & Maximum Speed(mm/s) Velocity | | |

# GETB5
## Single Axis
## Belt Driven

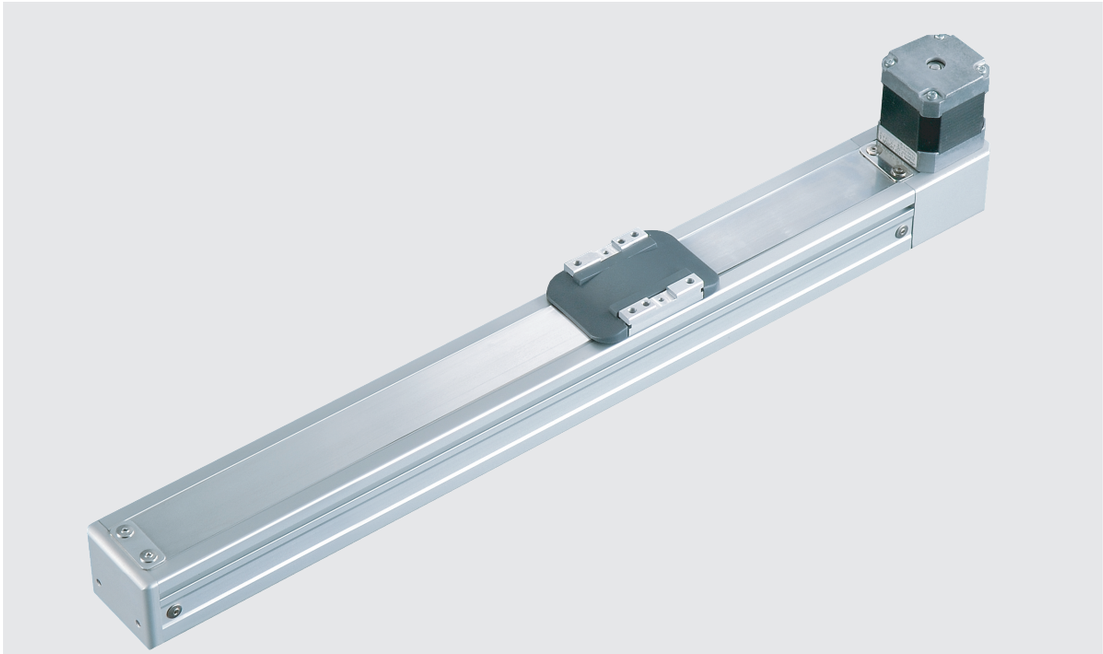

Maximum Stroke 800 mm | Maximum Speed 267 mm/s | Motor Output □42 | Belt Width 9 mm | Linear Guide 24X8.5-1Pc

## Ordering Method

GETB5 - X 32 - 100 - BM - 42 M - C 4 - 0001

Model | Special Order No.

**Belt Type**

| | |
|---|---|
| X | Rubber Belt |

**Lead**

**Stroke**

| |
|---|
| 100-800 mm<br>50 mm Pitch |

**Motor Position**

| | |
|---|---|
| BW | Motor on Top |
| BM | Motor at Bottom |

**Motor Brand**

| | |
|---|---|
| Tamagawa | TS3617N3E8 |
| Oriental motor | PK245-01A |
| Sanyo denki | 103H5209-0440 |

**Home Sensor**

| | |
|---|---|
| External | |
| C | Motor Side |
| D | Opposite Motor Side |
| Without Sensor | |
| E | Without Sensor |

**Limit Sensor**

| | |
|---|---|
| External | |
| 3 | 1 Pc |
| 4 | 2 Pc |
| Without Sensor | |
| 5 | Without Sensor |



GMT GLOBAL INC.
Motorized X-Axis ▶ Belt Driven ▶ Linear Drive
GETB5
GETB Specifications Introduction

## Specifications

| | | | |
|---|---|---|---|
| Performance | Repeatability (mm) | | ±0.04 |
| | Belt Lead (mm) | | 32 |
| | Maximum Speed (mm / s) | | 267 |
| | Maximum Load | Horizontal (kg) | 10 |
| | | Vertical (kg) | |
| | Rated Thrust (N) | | 42 |
| | Stroke / Pitch (mm) | | 100-800 mm / 50 mm Pitch |
| Parts | Belt Width (mm) | | 9 |
| | High Rigidity Linear Guide (mm) | | 24X8.5 |
| | Home Sensor | External | EE-SX672 (NPN) |

## Sensor Circuit Diagram

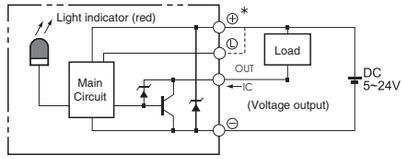


## Allowable Overhang (N.m)

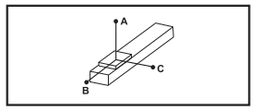


(Unit:mm)

| Horizontal Installation | A | B | C |
|---|---|---|---|
| 5 kg | 250 | 32 | 100 |
| 10 kg | 108 | 12 | 38 |

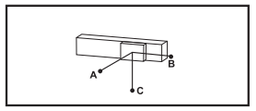


(Unit:mm)

| Wall Installation | A | B | C |
|---|---|---|---|
| 5 kg | 75 | 23 | 170 |
| 10 kg | 22 | 0 | 65 |

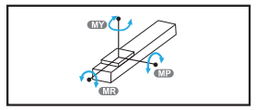


(Unit:N.m)

| Static Loading Moment | |
|---|---|
| MY | 56 |
| MP | 56 |
| MR | 95 |

## Stepping Motor Options

| Brand | AC-Voltage | Stepping Motor Model | Driver Model |
|---|---|---|---|
| Tamagawa | DC24V | 2-phase-TS3617N3E8 | CD-2D34M Resolution 200/400/800/1600 |
| Oriental motor | Single-phase100V | 2-phase-PK245-01A | UDK2112 Resolution 200/400/800/1600/3200 |
| Sanyo Denki | DDC24V | 2-phase-103H5209-0440 | US1D200P10 Resolution 200/400/800/1600/3200 |

# GETB5
## Single Axis
## Motor on Top / Motor at Bottom

### BW Motor on Top

2D CAD 3D CAD • CAD Download : www.gmtlinear.com •

(Unit:mm)

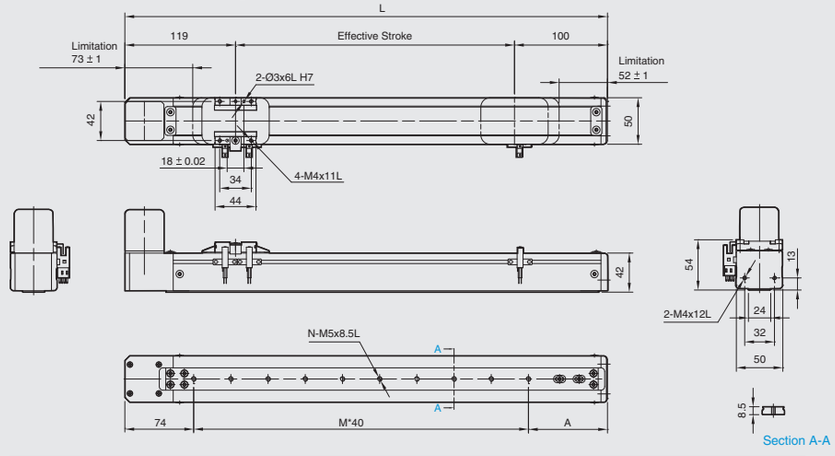


| Stroke | 100 | 150 | 200 | 250 | 300 | 350 | 400 | 450 | 500 | 550 | 600 | 650 | 700 | 750 | 800 |
|---|---|---|---|---|---|---|---|---|---|---|---|---|---|---|---|
| L | 319 | 369 | 419 | 469 | 519 | 569 | 619 | 669 | 719 | 769 | 819 | 869 | 919 | 969 | 1019 |
| A | 85 | 95 | 65 | 75 | 85 | 95 | 65 | 75 | 85 | 95 | 65 | 75 | 85 | 95 | 65 |
| M | 4 | 5 | 7 | 8 | 9 | 10 | 12 | 13 | 14 | 15 | 17 | 18 | 19 | 20 | 22 |
| N | 5 | 6 | 8 | 9 | 10 | 11 | 13 | 14 | 15 | 16 | 18 | 19 | 20 | 21 | 23 |
| KG | 2.2 | 2.3 | 2.4 | 2.5 | 2.6 | 2.7 | 2.8 | 2.9 | 3 | 3.1 | 3.2 | 3.3 | 3.4 | 3.5 | 3.6 |

### BM Motor at Bottom

2D CAD 3D CAD • CAD Download : www.gmtlinear.com •

(Unit:mm)

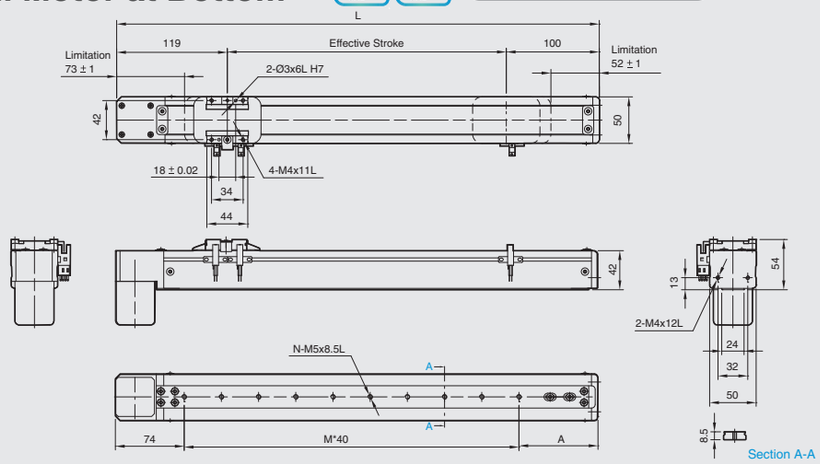


| Stroke | 100 | 150 | 200 | 250 | 300 | 350 | 400 | 450 | 500 | 550 | 600 | 650 | 700 | 750 | 800 |
|---|---|---|---|---|---|---|---|---|---|---|---|---|---|---|---|
| L | 319 | 369 | 419 | 469 | 519 | 569 | 619 | 669 | 719 | 769 | 819 | 869 | 919 | 969 | 1019 |
| A | 85 | 95 | 65 | 75 | 85 | 95 | 65 | 75 | 85 | 95 | 65 | 75 | 85 | 95 | 65 |
| M | 4 | 5 | 7 | 8 | 9 | 10 | 12 | 13 | 14 | 15 | 17 | 18 | 19 | 20 | 22 |
| N | 5 | 6 | 8 | 9 | 10 | 11 | 13 | 14 | 15 | 16 | 18 | 19 | 20 | 21 | 23 |
| KG | 2.2 | 2.3 | 2.4 | 2.5 | 2.6 | 2.7 | 2.8 | 2.9 | 3 | 3.1 | 3.2 | 3.3 | 3.4 | 3.5 | 3.6 |

# GETB5
## Single Axis
## Belt Driven

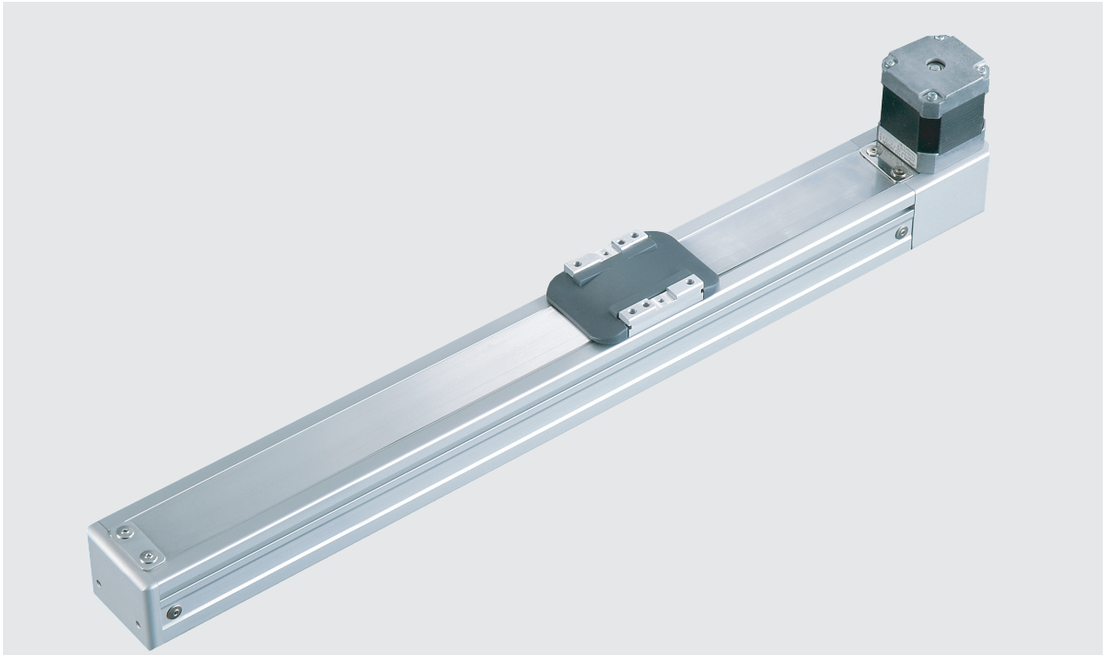

※Please follow the sizing graph for actual dimensions.

Maximum Stroke 800 mm | Maximum Speed 2000 mm/s | Motor Output 100W | Belt Width 9 mm | Linear Guide 24X8.5-1Pc

## Ordering Method

GETB5 - X 40 - 100 - BM - M 10 - C 4 - 0001

Model | Special Order No.

**Belt Type**

| | |
|---|---|
| X | Rubber Belt |

**Lead**

**Stroke**

| |
|---|
| 100-800 mm<br>50 mm Pitch |

**Motor Position**

| | |
|---|---|
| BW | Motor on Top |
| BM | Motor at Bottom |

**Motor Brand**

| | | | |
|---|---|---|---|
| M | Mitsubishi | 10 | 100W |
| P | Panasonic | 20 | - |
| Y | Yaskawa | 40 | - |
| T | Delta | 75 | - |

**Home Sensor**

| | |
|---|---|
| External | |
| C | Motor Side |
| D | Opposite Motor Side |
| Without Sensor | |
| E | Without Sensor |

**Limit Sensor**

| | |
|---|---|
| External | |
| 3 | 1 Pc |
| 4 | 2 Pc |
| Without Sensor | |
| 5 | Without Sensor |



Motorized X-Axis ▶ Belt Driven ▶ Linear Drive
GMT GLOBAL INC.
GETB5
GETB Specifications Introduction

## Specifications

| | | | |
|---|---|---|---|
| Performance | Repeatability (mm) | | ±0.04 |
| | Belt Lead (mm) | | 40 |
| | Maximum Speed (mm / s) | | 2000 |
| | Maximum Load | Horizontal (kg) | 3 |
| | | Vertical (kg) | |
| | Rated Thrust (N) | | 42 |
| | Stroke / Pitch (mm) | | 100-800 mm / 50 mm Pitch |
| Parts | AC Servo Motor Output (W) | | 100 |
| | Belt Width (mm) | | 9 |
| | High Rigidity Linear Guide (mm) | | 24X8.5 |
| | Home Sensor | External | EE-SX672 (NPN) |

## Sensor Circuit Diagram

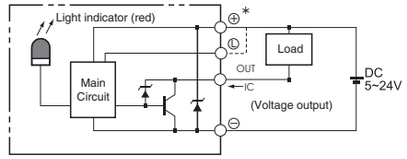


## Allowable Overhang (N.m)

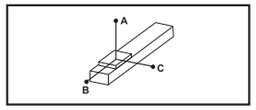


(Unit:mm)

| Horizontal Installation | A | B | C |
|---|---|---|---|
| 3 kg | 250 | 32 | 100 |

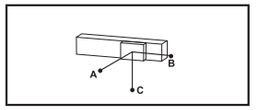


(Unit:mm)

| Wall Installation | A | B | C |
|---|---|---|---|
| 3 kg | 75 | 23 | 170 |

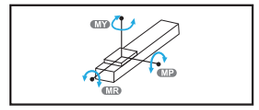


(Unit:N.m)

| Static Loading Moment | |
|---|---|
| MY | 56 |
| MP | 56 |
| MR | 95 |

## Servo Motor Options

| Brand | Mark | Brake | Motor Output | AC-Voltage | Motor Model | Driver Model |
|---|---|---|---|---|---|---|
| Mitsubishi | M | Without Brake (Horizontal Type) | 100 | 220 | HF-KP13 | MR-J3-10A |
| Panasonic | P | Without Brake (Horizontal Type) | 100 | 220 | MSMD012P1S | MADDT1205 |
| Delta | T | Without Brake (Horizontal Type) | 100 | 220 | ECMA-C20401ES | ASD-B20121-B |

# GETB5
## Single Axis
## Motor on Top / Motor at Bottom

### BW Motor on Top

2D CAD 3D CAD • CAD Download : www.gmtlinear.com •

(Unit:mm)

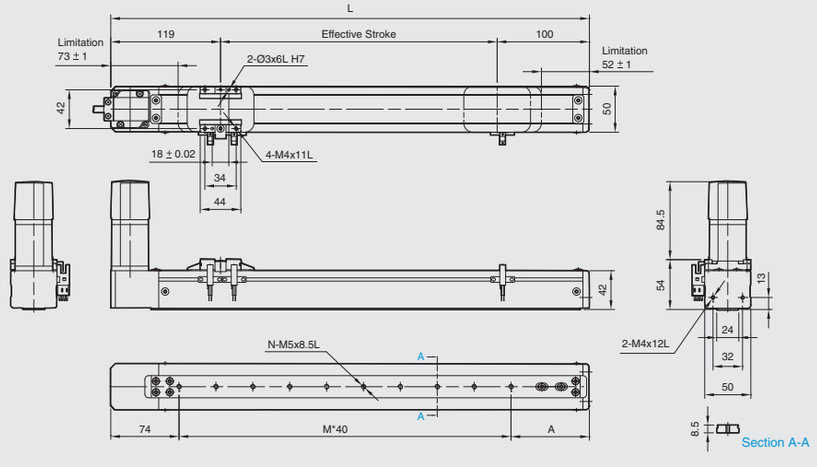


| Stroke | 100 | 150 | 200 | 250 | 300 | 350 | 400 | 450 | 500 | 550 | 600 | 650 | 700 | 750 | 800 |
|---|---|---|---|---|---|---|---|---|---|---|---|---|---|---|---|
| L | 319 | 369 | 419 | 469 | 519 | 569 | 619 | 669 | 719 | 769 | 819 | 869 | 919 | 969 | 1019 |
| A | 85 | 95 | 65 | 75 | 85 | 95 | 65 | 75 | 85 | 95 | 65 | 75 | 85 | 95 | 65 |
| M | 4 | 5 | 7 | 8 | 9 | 10 | 12 | 13 | 14 | 15 | 17 | 18 | 19 | 20 | 22 |
| N | 5 | 6 | 8 | 9 | 10 | 11 | 13 | 14 | 15 | 16 | 18 | 19 | 20 | 21 | 23 |
| KG | 2.2 | 2.3 | 2.4 | 2.5 | 2.6 | 2.7 | 2.8 | 2.9 | 3 | 3.1 | 3.2 | 3.3 | 3.4 | 3.5 | 3.6 |

### BM Motor at Bottom

2D CAD 3D CAD • CAD Download : www.gmtlinear.com •

(Unit:mm)

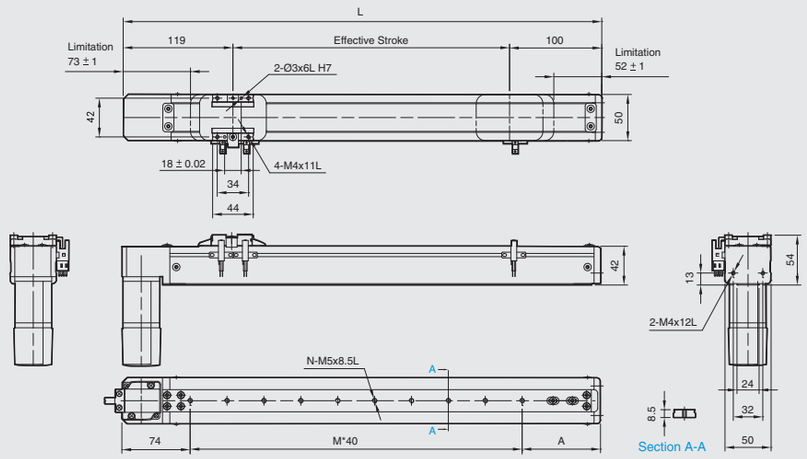


| Stroke | 100 | 150 | 200 | 250 | 300 | 350 | 400 | 450 | 500 | 550 | 600 | 650 | 700 | 750 | 800 |
|---|---|---|---|---|---|---|---|---|---|---|---|---|---|---|---|
| L | 319 | 369 | 419 | 469 | 519 | 569 | 619 | 669 | 719 | 769 | 819 | 869 | 919 | 969 | 1019 |
| A | 85 | 95 | 65 | 75 | 85 | 95 | 65 | 75 | 85 | 95 | 65 | 75 | 85 | 95 | 65 |
| M | 4 | 5 | 7 | 8 | 9 | 10 | 12 | 13 | 14 | 15 | 17 | 18 | 19 | 20 | 22 |
| N | 5 | 6 | 8 | 9 | 10 | 11 | 13 | 14 | 15 | 16 | 18 | 19 | 20 | 21 | 23 |
| KG | 2.2 | 2.3 | 2.4 | 2.5 | 2.6 | 2.7 | 2.8 | 2.9 | 3 | 3.1 | 3.2 | 3.3 | 3.4 | 3.5 | 3.6 |



GMT GLOBAL INC.

# GETB6
## Single Axis
## Belt Driven



Maximum Stroke 800 mm | Maximum Speed 333 mm/s | Motor Output □57 | Belt Width 12 mm | Linear Guide 42X9.5-1Pc

## Ordering Method

GETB6- X 40 - 100 - BM - 57 M - C 4 - M5 - 0001

Model | Special Order No.

**Belt Type**

| | |
|---|---|
| X | Rubber Belt |

**Lead**

**Stroke**

| |
|---|
| 100-800 mm<br>50 mm Pitch |

**Motor Position**

| | |
|---|---|
| BW | Motor on Top |
| BM | Motor at Bottom |

**Motor Brand**

| | |
|---|---|
| Tamagawa | TS3617N3E8 |
| Oriental motor | PK245-01A |
| Sanyo denki | 103H5209-0440 |

**Home Sensor**

| External | |
|---|---|
| C | Motor Side |
| D | Opposite Motor Side |
| **Without Sensor** | |
| E | Without Sensor |

**Limit Sensor**

| External | |
|---|---|
| 3 | 1 Pc |
| 4 | 2 Pc |
| **Without Sensor** | |
| 5 | Without Sensor |

**Installation Hole**

| | |
|---|---|
| Install on Bottom | M5 |
| Install on Internal | - |



Motorized X-Axis ▶ Belt Driven ▶ Linear Drive
GETB6
GMT GLOBAL INC.
GETB Specifications Introduction

## Specifications

| | | | |
|---|---|---|---|
| Performance | Repeatability (mm) | | ±0.04 |
| | Lead (mm) | | 40 |
| | Maximum Speed (mm / s) | | 333 |
| | Maximum Load | Horizontal (kg) | 15 |
| | | Vertical (kg) | |
| | Rated Thrust (N) | | 51 |
| | Stroke / Pitch (mm) | | 100-800 mm / 50 mm Pitch |
| Parts | Belt Width (mm) | | 12 |
| | High Rigidity Linear Guide (mm) | | 42X9.5 |
| | Home Sensor | External | EE-SX672 (NPN) |

## Sensor Circuit Diagram

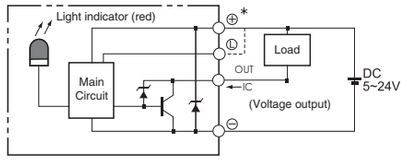


## Allowable Overhang (N.m)

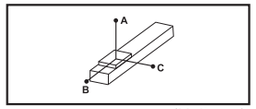


(Unit:mm)

| Horizontal Installation | A | B | C |
|---|---|---|---|
| 5 kg | 450 | 63 | 200 |
| 15 kg | 216 | 24 | 77 |

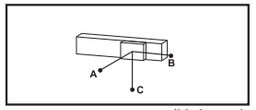


(Unit:mm)

| Wall Installation | A | B | C |
|---|---|---|---|
| 5 kg | 150 | 45 | 340 |
| 15 kg | 43 | 0 | 130 |

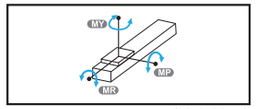


(Unit:N.m)

| Static Loading Moment | |
|---|---|
| MY | 93 |
| MP | 93 |
| MR | 257 |

## Stepping Motor Options

| Brand | AC-Voltage | Stepping Motor Model | Driver Model |
|---|---|---|---|
| Tamagawa | DC24V | 2-phase-TS3653N1E2 | CD-2D34M Resolution 200/400/800/1600 |
| Oriental motor | DC24V | 2-phase-PK264-02A | CMD2120P Resolution 200/400/800/1600/3200 |
| Sanyo Denki | DC24V | 2-phase-103H7121-0140 | US1D200P10 Resolution 200/400/800/1600/3200 |

# GETB6
## Single Axis
## Motor on Top / Motor at Bottom

### BW Motor on Top

2D CAD 3D CAD • CAD Download : www.gmtlinear.com •

(Unit:mm)

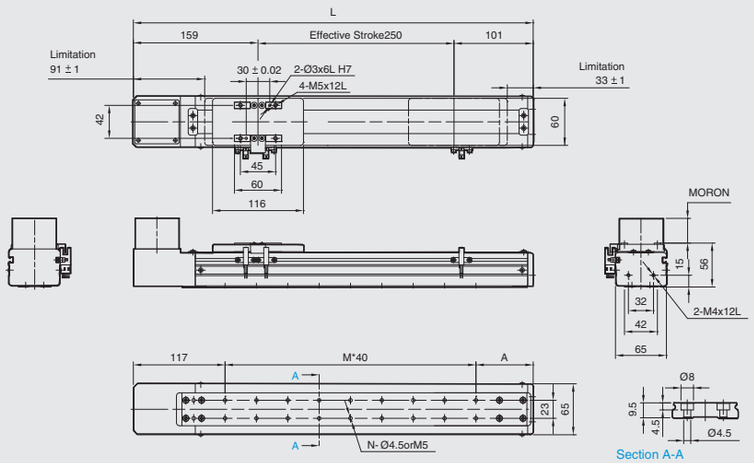


| Stroke | 100 | 150 | 200 | 250 | 300 | 350 | 400 | 450 | 500 | 550 | 600 | 650 | 700 | 750 | 800 |
|---|---|---|---|---|---|---|---|---|---|---|---|---|---|---|---|
| L | 360 | 410 | 460 | 510 | 560 | 610 | 660 | 710 | 760 | 810 | 860 | 910 | 960 | 1010 | 1060 |
| A | 83 | 93 | 63 | 73 | 83 | 93 | 63 | 73 | 83 | 93 | 63 | 73 | 83 | 93 | 63 |
| M | 4 | 5 | 7 | 8 | 9 | 10 | 12 | 13 | 14 | 15 | 17 | 18 | 19 | 20 | 22 |
| N | 10 | 12 | 16 | 18 | 20 | 22 | 26 | 28 | 30 | 32 | 36 | 38 | 40 | 42 | 46 |
| KG | 2.5 | 2.6 | 2.8 | 3 | 3.3 | 3.4 | 3.5 | 3.7 | 3.9 | 4.1 | 4.2 | 4.4 | 4.6 | 4.8 | 4.9 |

### BM Motor at Bottom

2D CAD 3D CAD • CAD Download : www.gmtlinear.com •

(Unit:mm)

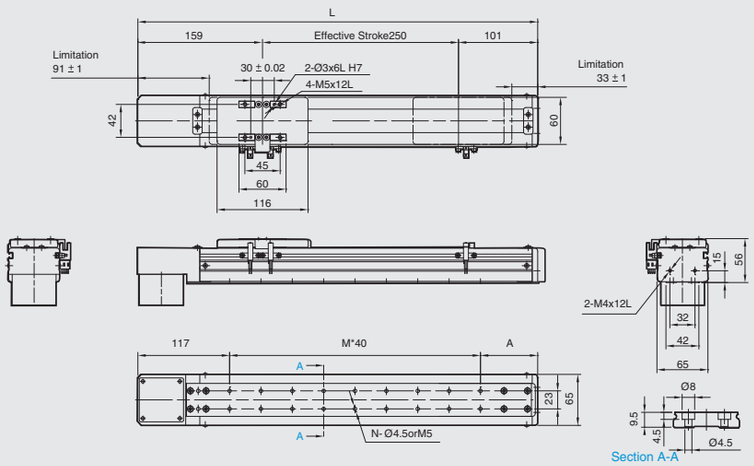


| Stroke | 100 | 150 | 200 | 250 | 300 | 350 | 400 | 450 | 500 | 550 | 600 | 650 | 700 | 750 | 800 |
|---|---|---|---|---|---|---|---|---|---|---|---|---|---|---|---|
| L | 360 | 410 | 460 | 510 | 560 | 610 | 660 | 710 | 760 | 810 | 860 | 910 | 960 | 1010 | 1060 |
| A | 83 | 93 | 63 | 73 | 83 | 93 | 63 | 73 | 83 | 93 | 63 | 73 | 83 | 93 | 63 |
| M | 4 | 5 | 7 | 8 | 9 | 10 | 12 | 13 | 14 | 15 | 17 | 18 | 19 | 20 | 22 |
| N | 10 | 12 | 16 | 18 | 20 | 22 | 26 | 28 | 30 | 32 | 36 | 38 | 40 | 42 | 46 |
| KG | 2.5 | 2.6 | 2.8 | 3 | 3.3 | 3.4 | 3.5 | 3.7 | 3.9 | 4.1 | 4.2 | 4.4 | 4.6 | 4.8 | 4.9 |



GMT GLOBAL INC.

# GETB6
## Single Axis
## Belt Driven



※Please follow the sizing graph for actual dimensions.

Maximum Stroke 800 mm | Maximum Speed 2000 mm/s | Motor Output 100W | Belt Width 12 mm | Linear Guide 42X9.5-1Pc

## Ordering Method

GETB6- X 40 - 100 - BM - M 10 - C 4 - M5 - 0001

Special Order No.

**Model**

**Belt Type**

| | |
|---|---|
| X | Rubber Belt |

**Lead**

**Stroke**

| |
|---|
| 100-800 mm<br>50 mm Pitch |

**Motor Position**

| | |
|---|---|
| BW | Motor on Top |
| BM | Motor at Bottom |

**Motor Brand**

| | | | |
|---|---|---|---|
| M | Mitsubishi | 10 | 100W |
| P | Panasonic | 20 | - |
| Y | Yaskawa | 40 | - |
| T | Delta | 75 | - |

**Home Sensor**

| | |
|---|---|
| External | |
| C | Motor Side |
| D | Opposite Motor Side |
| Without Sensor | |
| E | Without Sensor |

**Limit Sensor**

| | |
|---|---|
| External | |
| 3 | 1 Pc |
| 4 | 2 Pc |
| Without Sensor | |
| 5 | Without Sensor |

**Installation Hole**

| | |
|---|---|
| Install on Bottom | M5 |
| Install on Internal | - |



Motorized X-Axis ▶ Belt Driven ▶ Linear Drive
GETB6
GMT GLOBAL INC.
GETB Specifications Introduction

## Specification

| | | | |
|---|---|---|---|
| Performance | Repeatability (mm) | | ±0.04 |
| | Belt Lead (mm) | | 40 |
| | Maximum Speed (mm / s) | | 2000 |
| | Maximum Load | Horizontal (kg) | 3 |
| | | Vertical (kg) | |
| | Rated Thrust (N) | | 42 |
| | Stroke / Pitch (mm) | | 100-800 mm / 50 mm Pitch |
| Parts | AC Servo Motor Output (W) | | 100 |
| | Belt Width (mm) | | 12 |
| | High Rigidity Linear Guide (mm) | | 42X9.5 |
| | Home Sensor | External | EE-SX672 (NPN) |

## Sensor Circuit Diagram

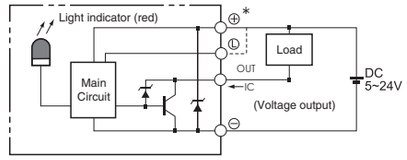


## Allowable Overhang (N.m)

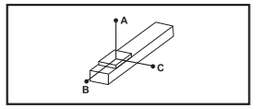


(Unit:mm)

| Horizontal Installation | A | B | C |
|---|---|---|---|
| 3kg | 450 | 63 | 200 |

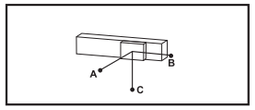


(Unit:mm)

| Wall Installation | A | B | C |
|---|---|---|---|
| 3kg | 150 | 45 | 340 |

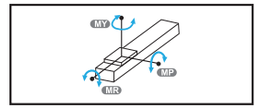


(Unit:N.m)

| Static Loading Moment | |
|---|---|
| MY | 93 |
| MP | 93 |
| MR | 257 |

## Stepping Motor Options

| Brand | Mark | Brake | Motor Output | AC-Voltage | Motor Model | Driver Model |
|---|---|---|---|---|---|---|
| Mitsubishi | M | Without Brake (Horizontal Type) | 100 | 220 | HF-KP13 | MR-J3-10A |
| Panasonic | P | Without Brake (Horizontal Type) | 100 | 220 | MSMD012P1S | MADDT1205 |
| Delta | T | Without Brake (Horizontal Type) | 100 | 220 | ECMA-C20401ES | ASD-B20121-B |

# GETB6
## Single Axis
## Motor on Top / Motor at Bottom

### BW Motor on Top

2D CAD 3D CAD • CAD Download : www.gmtlinear.com •

(Unit:mm)

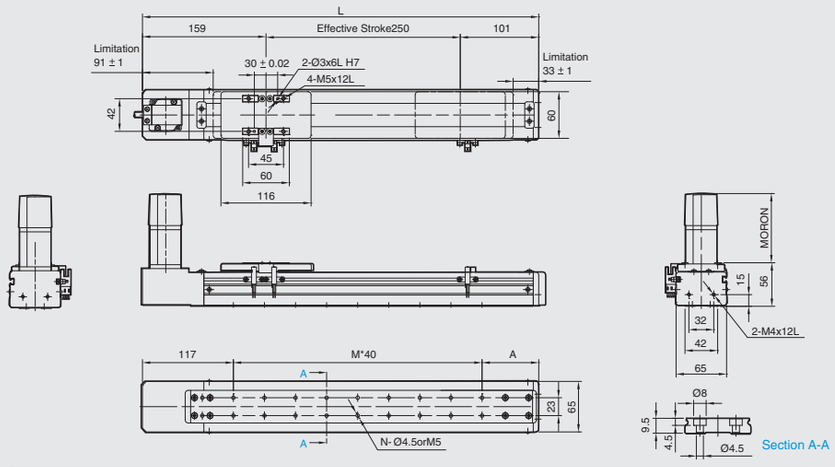


| Stroke | 100 | 150 | 200 | 250 | 300 | 350 | 400 | 450 | 500 | 550 | 600 | 650 | 700 | 750 | 800 |
|---|---|---|---|---|---|---|---|---|---|---|---|---|---|---|---|
| L | 360 | 410 | 460 | 510 | 560 | 610 | 660 | 710 | 760 | 810 | 860 | 910 | 960 | 1010 | 1060 |
| A | 83 | 93 | 63 | 73 | 83 | 93 | 63 | 73 | 83 | 93 | 63 | 73 | 83 | 93 | 63 |
| M | 4 | 5 | 7 | 8 | 9 | 10 | 12 | 13 | 14 | 15 | 17 | 18 | 19 | 20 | 22 |
| N | 10 | 12 | 16 | 18 | 20 | 22 | 26 | 28 | 30 | 32 | 36 | 38 | 40 | 42 | 46 |
| KG | 2.5 | 2.6 | 2.8 | 3 | 3.3 | 3.4 | 3.5 | 3.7 | 3.9 | 4.1 | 4.2 | 4.4 | 4.6 | 4.8 | 4.9 |

### BM Motor at Bottom

2D CAD 3D CAD • CAD Download : www.gmtlinear.com •

(Unit:mm)

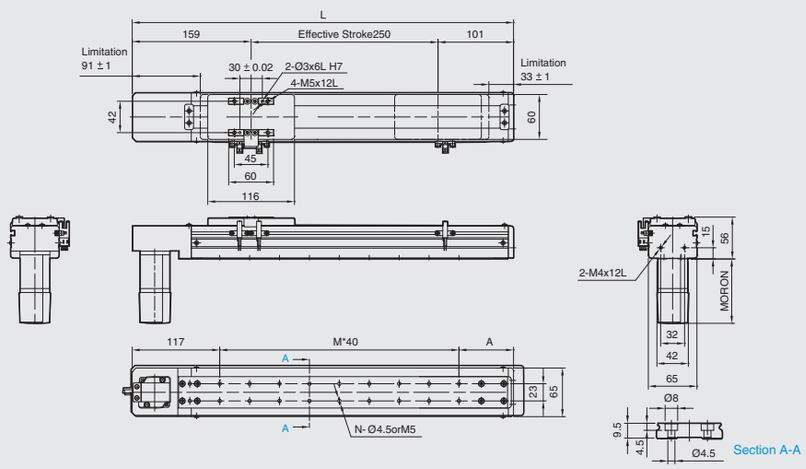


| Stroke | 100 | 150 | 200 | 250 | 300 | 350 | 400 | 450 | 500 | 550 | 600 | 650 | 700 | 750 | 800 |
|---|---|---|---|---|---|---|---|---|---|---|---|---|---|---|---|
| L | 360 | 410 | 460 | 510 | 560 | 610 | 660 | 710 | 760 | 810 | 860 | 910 | 960 | 1010 | 1060 |
| A | 83 | 93 | 63 | 73 | 83 | 93 | 63 | 73 | 83 | 93 | 63 | 73 | 83 | 93 | 63 |
| M | 4 | 5 | 7 | 8 | 9 | 10 | 12 | 13 | 14 | 15 | 17 | 18 | 19 | 20 | 22 |
| N | 10 | 12 | 16 | 18 | 20 | 22 | 26 | 28 | 30 | 32 | 36 | 38 | 40 | 42 | 46 |
| KG | 2.5 | 2.6 | 2.8 | 3 | 3.3 | 3.4 | 3.5 | 3.7 | 3.9 | 4.1 | 4.2 | 4.4 | 4.6 | 4.8 | 4.9 |

# GETB10
## Single Axis
## Belt Driven



Maximum Stroke 2550 mm | Maximum Speed 1600 mm/s | Motor Output 100W | Belt Width 15 mm | Linear Guide 20X18-1Pc

## Ordering Method

GETB10 - X 32 - 100 - L - M 10 - C 4 - 0001

GETB10 — Model

**Belt Type**

| | |
|---|---|
| L | PU Belt |
| X | Rubber Belt |

**Lead**

**Stroke**

| |
|---|
| 100-2550 mm |
| 50 Pitch |

**Motor Position**

| | |
|---|---|
| L | Motor on Left Side |
| LU | Motor on Upper Left Side |
| LD | Motor on Lower Left Side |
| R | Motor on Right Side |
| RU | Motor on Upper Right Side |
| RD | Motor on Lower Right Side |

**Motor Brand**

| | | | |
|---|---|---|---|
| M | Mitsubishi | 10 | 100W |
| P | Panasonic | 20 | - |
| Y | Yaskawa | 40 | - |
| T | Delta | 75 | - |

**Home Sensor**

| | |
|---|---|
| External | |
| C | Motor Side |
| D | Opposite Motor Side |
| Without Sensor | |
| E | Without Sensor |

**Limit Sensor**

| | |
|---|---|
| External | |
| 3 | 1 Pc |
| 4 | 2 Pc |
| Without Sensor | |
| 5 | Without Sensor |



GMT GLOBAL INC.
Motorized X-Axis ▶ Belt Driven ▶ Linear Drive
GETB10
GETB Specifications Introduction

## Specifications

| | | | |
|---|---|---|---|
| Performance | Repeatability (mm) | | ±0.04 |
| | Belt Lead (mm) | | 32 |
| | Maximum Speed (mm / s) | | 1600 |
| | Maximum Load | Horizontal (kg) | 10 |
| | | Vertical (kg) | |
| | Rated Thrust (N) | | 61 |
| | Stroke / Pitch (mm) | | 100-2550 mm / 50 mm Pitch |
| Parts | AC Servo Motor Output (W) | | 100 |
| | Belt Width (mm) | | 15 |
| | High Rigidity Linear Guide (mm) | | 20X18 |
| | Home Sensor | External | EE-SX672 (NPN) |

## Sensor Circuit Diagram

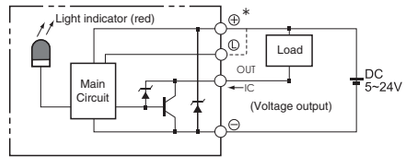


## Allowable Overhang (N.m)

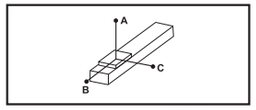


(Unit:mm)

| Horizontal Installation | A | B | C |
|---|---|---|---|
| 5kg | 1400 | 750 | 600 |
| 8kg | 1100 | 450 | 400 |
| 10kg | 1000 | 350 | 350 |

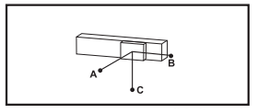


(Unit:mm)

| Wall Installation | A | B | C |
|---|---|---|---|
| 5kg | 660 | 500 | 1100 |
| 8kg | 450 | 300 | 850 |
| 10kg | 350 | 220 | 800 |

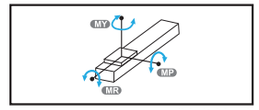


(Unit:N.m)

| Static Loading Moment | |
|---|---|
| MY | 110 |
| MP | 110 |
| MR | 120 |

## Servo Motor Options

| Brand | Mark | Brake | Motor Output | AC-Voltage | Motor Model | Driver Model |
|---|---|---|---|---|---|---|
| Mitsubishi | M | Without Brake (Horizontal Type) | 100 | 220 | HF-KP13 | MR-J3-10A |
| Panasonic | P | Without Brake (Horizontal Type) | 100 | 220 | MSMD012P1S | MADDT1205 |
| Delta | T | Without Brake (Horizontal Type) | 100 | 220 | ECMA-C20401ES | ASD-B20121-B |

# GETB10
## Single Axis
## Motor on Left Side / Motor on Right Side

### L Motor on Left Side

2D CAD 3D CAD • CAD Download : www.gmtlinear.com •

(Unit:mm)

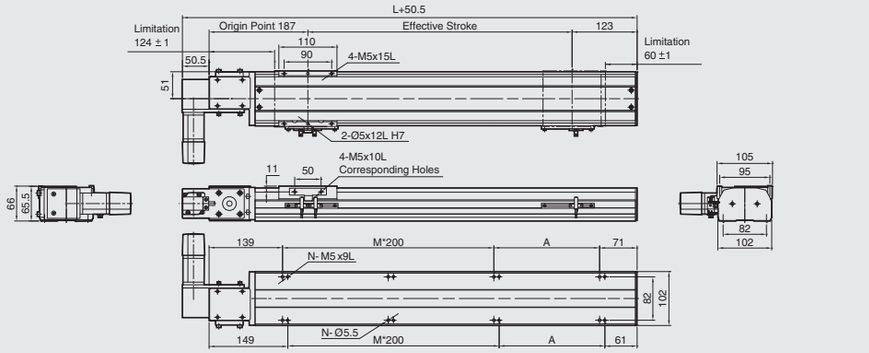


| Stroke | 100 | 150 | 200 | 250 | 300 | 350 | 400 | 450 | 500 | 550 | 600 | 650 | 700 | 750 | 800 | 850 | 900 | 950 | 1000 | 1050 | 1100 | 1150 | 1200 | 1250 | 1300 |
|---|---|---|---|---|---|---|---|---|---|---|---|---|---|---|---|---|---|---|---|---|---|---|---|---|---|
| L | 410 | 460 | 510 | 560 | 610 | 660 | 710 | 760 | 810 | 860 | 910 | 960 | 1010 | 1060 | 1110 | 1160 | 1210 | 1260 | 1310 | 1360 | 1410 | 1460 | 1510 | 1560 | 1610 |
| A | 200 | 50 | 100 | 150 | 200 | 50 | 100 | 150 | 200 | 50 | 100 | 150 | 200 | 50 | 100 | 150 | 200 | 50 | 100 | 150 | 200 | 50 | 100 | 150 | 200 |
| M | 0 | 1 | 1 | 1 | 1 | 2 | 2 | 2 | 2 | 3 | 3 | 3 | 3 | 4 | 4 | 4 | 4 | 5 | 5 | 5 | 5 | 6 | 6 | 6 | 6 |
| N | 4 | 6 | 6 | 6 | 6 | 8 | 8 | 8 | 8 | 10 | 10 | 10 | 10 | 12 | 12 | 12 | 12 | 14 | 14 | 14 | 14 | 16 | 16 | 16 | 16 |
| KG | 6.8 | 7.23 | 7.65 | 8.07 | 8.5 | 8.92 | 9.34 | 9.76 | 10.19 | 10.61 | 11.03 | 11.46 | 11.88 | 12.3 | 12.73 | 13.15 | 13.57 | 13.99 | 14.42 | 14.84 | 15.26 | 15.68 | 16.1 | 16.52 | 16.94 |

| Stroke | 1350 | 1400 | 1450 | 1500 | 1550 | 1600 | 1650 | 1700 | 1750 | 1800 | 1850 | 1900 | 1950 | 2000 | 2050 | 2100 | 2150 | 2200 | 2250 | 2300 | 2350 | 2400 | 2450 | 2500 | 2550 |
|---|---|---|---|---|---|---|---|---|---|---|---|---|---|---|---|---|---|---|---|---|---|---|---|---|---|
| L | 1660 | 1710 | 1760 | 1810 | 1860 | 1910 | 1960 | 2010 | 2060 | 2110 | 2160 | 2210 | 2260 | 2310 | 2360 | 2410 | 2460 | 2510 | 2560 | 2610 | 2660 | 2710 | 2760 | 2810 | 2860 |
| A | 50 | 100 | 150 | 200 | 50 | 100 | 150 | 200 | 50 | 100 | 150 | 200 | 50 | 100 | 150 | 200 | 50 | 100 | 150 | 200 | 50 | 100 | 150 | 200 | 50 |
| M | 7 | 7 | 7 | 7 | 8 | 8 | 8 | 8 | 9 | 9 | 9 | 9 | 10 | 10 | 10 | 10 | 11 | 11 | 11 | 11 | 12 | 12 | 12 | 12 | 13 |
| N | 18 | 18 | 18 | 18 | 20 | 20 | 20 | 20 | 22 | 22 | 22 | 24 | 24 | 24 | 24 | 24 | 26 | 26 | 26 | 26 | 28 | 28 | 28 | 28 | 30 |
| KG | 17.36 | 17.78 | 18.2 | 18.62 | 19.04 | 19.46 | 19.88 | 20.3 | 20.72 | 21.14 | 21.56 | 21.98 | 22.4 | 22.82 | 23.24 | 23.66 | 24.08 | 24.5 | 24.92 | 25.34 | 25.76 | 26.18 | 26.6 | 27.02 | 27.44 |

### R Motor on Right Side

2D CAD 3D CAD • CAD Download : www.gmtlinear.com •

(Unit:mm)

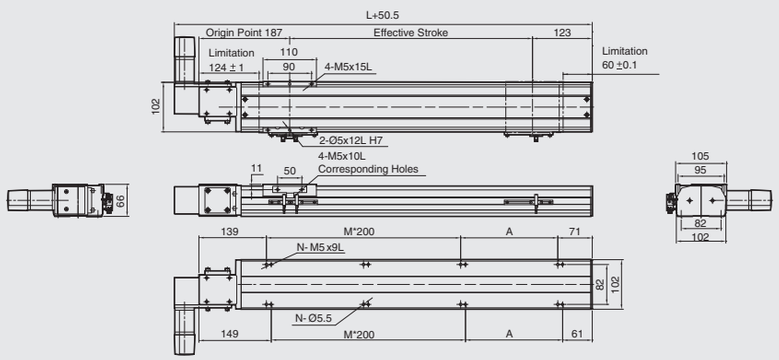


| Stroke | 100 | 150 | 200 | 250 | 300 | 350 | 400 | 450 | 500 | 550 | 600 | 650 | 700 | 750 | 800 | 850 | 900 | 950 | 1000 | 1050 | 1100 | 1150 | 1200 | 1250 | 1300 |
|---|---|---|---|---|---|---|---|---|---|---|---|---|---|---|---|---|---|---|---|---|---|---|---|---|---|
| L | 410 | 460 | 510 | 560 | 610 | 660 | 710 | 760 | 810 | 860 | 910 | 960 | 1010 | 1060 | 1110 | 1160 | 1210 | 1260 | 1310 | 1360 | 1410 | 1460 | 1510 | 1560 | 1610 |
| A | 200 | 50 | 100 | 150 | 200 | 50 | 100 | 150 | 200 | 50 | 100 | 150 | 200 | 50 | 100 | 150 | 200 | 50 | 100 | 150 | 200 | 50 | 100 | 150 | 200 |
| M | 0 | 1 | 1 | 1 | 1 | 2 | 2 | 2 | 2 | 3 | 3 | 3 | 3 | 4 | 4 | 4 | 4 | 5 | 5 | 5 | 5 | 6 | 6 | 6 | 6 |
| N | 4 | 6 | 6 | 6 | 6 | 8 | 8 | 8 | 8 | 10 | 10 | 10 | 10 | 12 | 12 | 12 | 12 | 14 | 14 | 14 | 14 | 16 | 16 | 16 | 16 |
| KG | 6.8 | 7.23 | 7.65 | 8.07 | 8.5 | 8.92 | 9.34 | 9.76 | 10.19 | 10.61 | 11.03 | 11.46 | 11.88 | 12.3 | 12.73 | 13.15 | 13.57 | 13.99 | 14.42 | 14.84 | 15.26 | 15.68 | 16.1 | 16.52 | 16.94 |

| Stroke | 1350 | 1400 | 1450 | 1500 | 1550 | 1600 | 1650 | 1700 | 1750 | 1800 | 1850 | 1900 | 1950 | 2000 | 2050 | 2100 | 2150 | 2200 | 2250 | 2300 | 2350 | 2400 | 2450 | 2500 | 2550 |
|---|---|---|---|---|---|---|---|---|---|---|---|---|---|---|---|---|---|---|---|---|---|---|---|---|---|
| L | 1660 | 1710 | 1760 | 1810 | 1860 | 1910 | 1960 | 2010 | 2060 | 2110 | 2160 | 2210 | 2260 | 2310 | 2360 | 2410 | 2460 | 2510 | 2560 | 2610 | 2660 | 2710 | 2760 | 2810 | 2860 |
| A | 50 | 100 | 150 | 200 | 50 | 100 | 150 | 200 | 50 | 100 | 150 | 200 | 50 | 100 | 150 | 200 | 50 | 100 | 150 | 200 | 50 | 100 | 150 | 200 | 50 |
| M | 7 | 7 | 7 | 7 | 8 | 8 | 8 | 8 | 9 | 9 | 9 | 9 | 10 | 10 | 10 | 10 | 11 | 11 | 11 | 11 | 12 | 12 | 12 | 12 | 13 |
| N | 18 | 18 | 18 | 18 | 20 | 20 | 20 | 20 | 22 | 22 | 22 | 24 | 24 | 24 | 24 | 24 | 26 | 26 | 26 | 26 | 28 | 28 | 28 | 28 | 30 |
| KG | 17.36 | 17.78 | 18.2 | 18.62 | 19.04 | 19.46 | 19.88 | 20.3 | 20.72 | 21.14 | 21.56 | 21.98 | 22.4 | 22.82 | 23.24 | 23.66 | 24.08 | 24.5 | 24.92 | 25.34 | 25.76 | 26.18 | 26.6 | 27.02 | 27.44 |





# GETB10
## Single Axis
## Motor on Lower Left Side / Motor on Lower Right Side

### LD Motor on Lower Left Side

2D CAD 3D CAD • CAD Download : www.gmtlinear.com •

(Unit:mm)

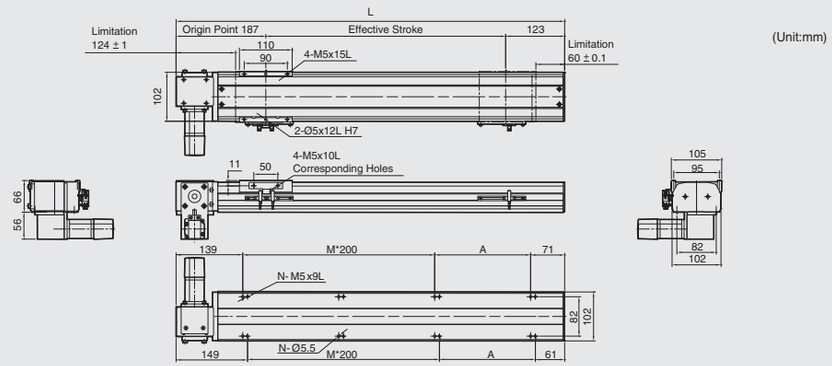


| Stroke | 100 | 150 | 200 | 250 | 300 | 350 | 400 | 450 | 500 | 550 | 600 | 650 | 700 | 750 | 800 | 850 | 900 | 950 | 1000 | 1050 | 1100 | 1150 | 1200 | 1250 | 1300 |
|---|---|---|---|---|---|---|---|---|---|---|---|---|---|---|---|---|---|---|---|---|---|---|---|---|---|
| L | 410 | 460 | 510 | 560 | 610 | 660 | 710 | 760 | 810 | 860 | 910 | 960 | 1010 | 1060 | 1110 | 1160 | 1210 | 1260 | 1310 | 1360 | 1410 | 1460 | 1510 | 1560 | 1610 |
| A | 200 | 50 | 100 | 150 | 200 | 50 | 100 | 150 | 200 | 50 | 100 | 150 | 200 | 50 | 100 | 150 | 200 | 50 | 100 | 150 | 200 | 50 | 100 | 150 | 200 |
| M | 0 | 1 | 1 | 1 | 1 | 2 | 2 | 2 | 2 | 3 | 3 | 3 | 3 | 4 | 4 | 4 | 4 | 5 | 5 | 5 | 5 | 6 | 6 | 6 | 6 |
| N | 4 | 6 | 6 | 6 | 6 | 8 | 8 | 8 | 8 | 10 | 10 | 10 | 10 | 12 | 12 | 12 | 12 | 14 | 14 | 14 | 14 | 16 | 16 | 16 | 16 |
| KG | 6.8 | 7.23 | 7.65 | 8.07 | 8.5 | 8.92 | 9.34 | 9.76 | 10.19 | 10.61 | 11.03 | 11.46 | 11.88 | 12.3 | 12.73 | 13.15 | 13.57 | 13.99 | 14.42 | 14.84 | 15.26 | 15.68 | 16.1 | 16.52 | 16.94 |

| Stroke | 1350 | 1400 | 1450 | 1500 | 1550 | 1600 | 1650 | 1700 | 1750 | 1800 | 1850 | 1900 | 1950 | 2000 | 2050 | 2100 | 2150 | 2200 | 2250 | 2300 | 2350 | 2400 | 2450 | 2500 | 2550 |
|---|---|---|---|---|---|---|---|---|---|---|---|---|---|---|---|---|---|---|---|---|---|---|---|---|---|
| L | 1660 | 1710 | 1760 | 1810 | 1860 | 1910 | 1960 | 2010 | 2060 | 2110 | 2160 | 2210 | 2260 | 2310 | 2360 | 2410 | 2460 | 2510 | 2560 | 2610 | 2660 | 2710 | 2760 | 2810 | 2860 |
| A | 50 | 100 | 150 | 200 | 50 | 100 | 150 | 200 | 50 | 100 | 150 | 200 | 50 | 100 | 150 | 200 | 50 | 100 | 150 | 200 | 50 | 100 | 150 | 200 | 50 |
| M | 7 | 7 | 7 | 7 | 8 | 8 | 8 | 8 | 9 | 9 | 9 | 9 | 10 | 10 | 10 | 10 | 11 | 11 | 11 | 11 | 12 | 12 | 12 | 12 | 13 |
| N | 18 | 18 | 18 | 18 | 20 | 20 | 20 | 20 | 22 | 22 | 22 | 24 | 24 | 24 | 24 | 24 | 26 | 26 | 26 | 26 | 28 | 28 | 28 | 28 | 30 |
| KG | 17.36 | 17.78 | 18.2 | 18.62 | 19.04 | 19.46 | 19.88 | 20.3 | 20.72 | 21.14 | 21.56 | 21.98 | 22.4 | 22.82 | 23.24 | 23.66 | 24.08 | 24.5 | 24.92 | 25.34 | 25.76 | 26.18 | 26.6 | 27.02 | 27.44 |

### RD Motor on Lower Right Side

2D CAD 3D CAD • CAD Download : www.gmtlinear.com •

(Unit:mm)

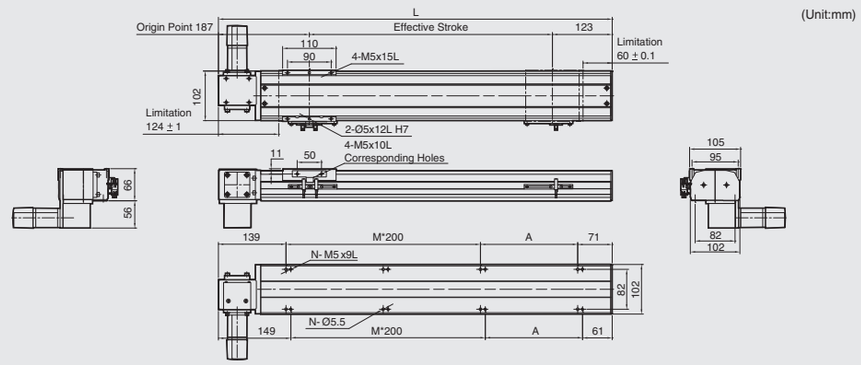


| Stroke | 100 | 150 | 200 | 250 | 300 | 350 | 400 | 450 | 500 | 550 | 600 | 650 | 700 | 750 | 800 | 850 | 900 | 950 | 1000 | 1050 | 1100 | 1150 | 1200 | 1250 | 1300 |
|---|---|---|---|---|---|---|---|---|---|---|---|---|---|---|---|---|---|---|---|---|---|---|---|---|---|
| L | 410 | 460 | 510 | 560 | 610 | 660 | 710 | 760 | 810 | 860 | 910 | 960 | 1010 | 1060 | 1110 | 1160 | 1210 | 1260 | 1310 | 1360 | 1410 | 1460 | 1510 | 1560 | 1610 |
| A | 200 | 50 | 100 | 150 | 200 | 50 | 100 | 150 | 200 | 50 | 100 | 150 | 200 | 50 | 100 | 150 | 200 | 50 | 100 | 150 | 200 | 50 | 100 | 150 | 200 |
| M | 0 | 1 | 1 | 1 | 1 | 2 | 2 | 2 | 2 | 3 | 3 | 3 | 3 | 4 | 4 | 4 | 4 | 5 | 5 | 5 | 5 | 6 | 6 | 6 | 6 |
| N | 4 | 6 | 6 | 6 | 6 | 8 | 8 | 8 | 8 | 10 | 10 | 10 | 10 | 12 | 12 | 12 | 12 | 14 | 14 | 14 | 14 | 16 | 16 | 16 | 16 |
| KG | 6.8 | 7.23 | 7.65 | 8.07 | 8.5 | 8.92 | 9.34 | 9.76 | 10.19 | 10.61 | 11.03 | 11.46 | 11.88 | 12.3 | 12.73 | 13.15 | 13.57 | 13.99 | 14.42 | 14.84 | 15.26 | 15.68 | 16.1 | 16.52 | 16.94 |

| Stroke | 1350 | 1400 | 1450 | 1500 | 1550 | 1600 | 1650 | 1700 | 1750 | 1800 | 1850 | 1900 | 1950 | 2000 | 2050 | 2100 | 2150 | 2200 | 2250 | 2300 | 2350 | 2400 | 2450 | 2500 | 2550 |
|---|---|---|---|---|---|---|---|---|---|---|---|---|---|---|---|---|---|---|---|---|---|---|---|---|---|
| L | 1660 | 1710 | 1760 | 1810 | 1860 | 1910 | 1960 | 2010 | 2060 | 2110 | 2160 | 2210 | 2260 | 2310 | 2360 | 2410 | 2460 | 2510 | 2560 | 2610 | 2660 | 2710 | 2760 | 2810 | 2860 |
| A | 50 | 100 | 150 | 200 | 50 | 100 | 150 | 200 | 50 | 100 | 150 | 200 | 50 | 100 | 150 | 200 | 50 | 100 | 150 | 200 | 50 | 100 | 150 | 200 | 50 |
| M | 7 | 7 | 7 | 7 | 8 | 8 | 8 | 8 | 9 | 9 | 9 | 9 | 10 | 10 | 10 | 10 | 11 | 11 | 11 | 11 | 12 | 12 | 12 | 12 | 13 |
| N | 18 | 18 | 18 | 18 | 20 | 20 | 20 | 20 | 22 | 22 | 22 | 22 | 24 | 24 | 24 | 24 | 26 | 26 | 26 | 26 | 28 | 28 | 28 | 28 | 30 |
| KG | 17.36 | 17.78 | 18.2 | 18.62 | 19.04 | 19.46 | 19.88 | 20.3 | 20.72 | 21.14 | 21.56 | 21.98 | 22.4 | 22.82 | 23.24 | 23.66 | 24.08 | 24.5 | 24.92 | 25.34 | 25.76 | 26.18 | 26.6 | 27.02 | 27.44 |

# GETB10
## Single Axis
## Motor on Upper Left Side / Motor on Upper Right Side

### LU Motor on Upper Left Side

2D CAD 3D CAD • CAD Download : www.gmtlinear.com •

(Unit:mm)

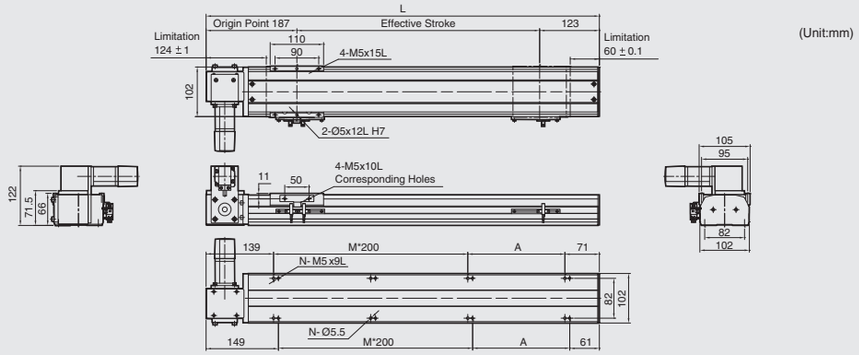


| Stroke | 100 | 150 | 200 | 250 | 300 | 350 | 400 | 450 | 500 | 550 | 600 | 650 | 700 | 750 | 800 | 850 | 900 | 950 | 1000 | 1050 | 1100 | 1150 | 1200 | 1250 | 1300 |
|---|---|---|---|---|---|---|---|---|---|---|---|---|---|---|---|---|---|---|---|---|---|---|---|---|---|
| L | 410 | 460 | 510 | 560 | 610 | 660 | 710 | 760 | 810 | 860 | 910 | 960 | 1010 | 1060 | 1110 | 1160 | 1210 | 1260 | 1310 | 1360 | 1410 | 1460 | 1510 | 1560 | 1610 |
| A | 200 | 50 | 100 | 150 | 200 | 50 | 100 | 150 | 200 | 50 | 100 | 150 | 200 | 50 | 100 | 150 | 200 | 50 | 100 | 150 | 200 | 50 | 100 | 150 | 200 |
| M | 0 | 1 | 1 | 1 | 1 | 2 | 2 | 2 | 2 | 3 | 3 | 3 | 3 | 4 | 4 | 4 | 4 | 5 | 5 | 5 | 5 | 6 | 6 | 6 | 6 |
| N | 4 | 6 | 6 | 6 | 6 | 8 | 8 | 8 | 8 | 10 | 10 | 10 | 10 | 12 | 12 | 12 | 12 | 14 | 14 | 14 | 14 | 16 | 16 | 16 | 16 |
| KG | 6.8 | 7.23 | 7.65 | 8.07 | 8.5 | 8.92 | 9.34 | 9.76 | 10.19 | 10.61 | 11.03 | 11.46 | 11.88 | 12.3 | 12.73 | 13.15 | 13.57 | 13.99 | 14.42 | 14.84 | 15.26 | 15.68 | 16.1 | 16.52 | 16.94 |

| Stroke | 1350 | 1400 | 1450 | 1500 | 1550 | 1600 | 1650 | 1700 | 1750 | 1800 | 1850 | 1900 | 1950 | 2000 | 2050 | 2100 | 2150 | 2200 | 2250 | 2300 | 2350 | 2400 | 2450 | 2500 | 2550 |
|---|---|---|---|---|---|---|---|---|---|---|---|---|---|---|---|---|---|---|---|---|---|---|---|---|---|
| L | 1660 | 1710 | 1760 | 1810 | 1860 | 1910 | 1960 | 2010 | 2060 | 2110 | 2160 | 2210 | 2260 | 2310 | 2360 | 2410 | 2460 | 2510 | 2560 | 2610 | 2660 | 2710 | 2760 | 2810 | 2860 |
| A | 50 | 100 | 150 | 200 | 50 | 100 | 150 | 200 | 50 | 100 | 150 | 200 | 50 | 100 | 150 | 200 | 50 | 100 | 150 | 200 | 50 | 100 | 150 | 200 | 50 |
| M | 7 | 7 | 7 | 7 | 8 | 8 | 8 | 8 | 9 | 9 | 9 | 9 | 10 | 10 | 10 | 10 | 11 | 11 | 11 | 11 | 12 | 12 | 12 | 12 | 13 |
| N | 18 | 18 | 18 | 18 | 20 | 20 | 20 | 20 | 22 | 22 | 22 | 22 | 24 | 24 | 24 | 24 | 26 | 26 | 26 | 26 | 28 | 28 | 28 | 28 | 30 |
| KG | 17.36 | 17.78 | 18.2 | 18.62 | 19.04 | 19.46 | 19.88 | 20.3 | 20.72 | 21.14 | 21.56 | 21.98 | 22.4 | 22.82 | 23.24 | 23.66 | 24.08 | 24.5 | 24.92 | 25.34 | 25.76 | 26.18 | 26.6 | 27.02 | 27.44 |

### RU Motor on Upper Right Side

2D CAD 3D CAD • CAD Download : www.gmtlinear.com •

(Unit:mm)

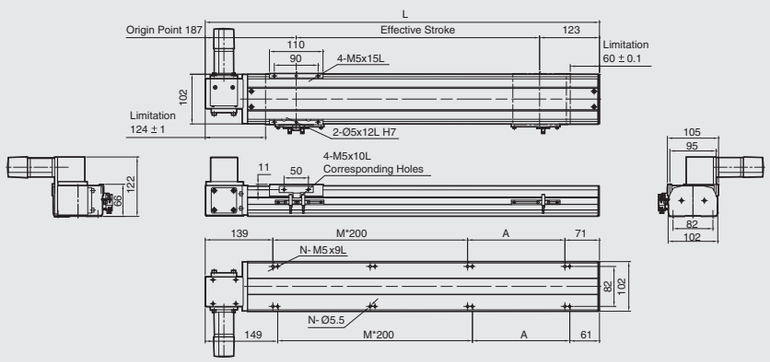


| Stroke | 100 | 150 | 200 | 250 | 300 | 350 | 400 | 450 | 500 | 550 | 600 | 650 | 700 | 750 | 800 | 850 | 900 | 950 | 1000 | 1050 | 1100 | 1150 | 1200 | 1250 | 1300 |
|---|---|---|---|---|---|---|---|---|---|---|---|---|---|---|---|---|---|---|---|---|---|---|---|---|---|
| L | 410 | 460 | 510 | 560 | 610 | 660 | 710 | 760 | 810 | 860 | 910 | 960 | 1010 | 1060 | 1110 | 1160 | 1210 | 1260 | 1310 | 1360 | 1410 | 1460 | 1510 | 1560 | 1610 |
| A | 200 | 50 | 100 | 150 | 200 | 50 | 100 | 150 | 200 | 50 | 100 | 150 | 200 | 50 | 100 | 150 | 200 | 50 | 100 | 150 | 200 | 50 | 100 | 150 | 200 |
| M | 0 | 1 | 1 | 1 | 1 | 2 | 2 | 2 | 2 | 3 | 3 | 3 | 3 | 4 | 4 | 4 | 4 | 5 | 5 | 5 | 5 | 6 | 6 | 6 | 6 |
| N | 4 | 6 | 6 | 6 | 6 | 8 | 8 | 8 | 8 | 10 | 10 | 10 | 10 | 12 | 12 | 12 | 12 | 14 | 14 | 14 | 14 | 16 | 16 | 16 | 16 |
| KG | 6.8 | 7.23 | 7.65 | 8.07 | 8.5 | 8.92 | 9.34 | 9.76 | 10.19 | 10.61 | 11.03 | 11.46 | 11.88 | 12.3 | 12.73 | 13.15 | 13.57 | 13.99 | 14.42 | 14.84 | 15.26 | 15.68 | 16.1 | 16.52 | 16.94 |

| Stroke | 1350 | 1400 | 1450 | 1500 | 1550 | 1600 | 1650 | 1700 | 1750 | 1800 | 1850 | 1900 | 1950 | 2000 | 2050 | 2100 | 2150 | 2200 | 2250 | 2300 | 2350 | 2400 | 2450 | 2500 | 2550 |
|---|---|---|---|---|---|---|---|---|---|---|---|---|---|---|---|---|---|---|---|---|---|---|---|---|---|
| L | 1660 | 1710 | 1760 | 1810 | 1860 | 1910 | 1960 | 2010 | 2060 | 2110 | 2160 | 2210 | 2260 | 2310 | 2360 | 2410 | 2460 | 2510 | 2560 | 2610 | 2660 | 2710 | 2760 | 2810 | 2860 |
| A | 50 | 100 | 150 | 200 | 50 | 100 | 150 | 200 | 50 | 100 | 150 | 200 | 50 | 100 | 150 | 200 | 50 | 100 | 150 | 200 | 50 | 100 | 150 | 200 | 50 |
| M | 7 | 7 | 7 | 7 | 8 | 8 | 8 | 8 | 9 | 9 | 9 | 9 | 10 | 10 | 10 | 10 | 11 | 11 | 11 | 11 | 12 | 12 | 12 | 12 | 13 |
| N | 18 | 18 | 18 | 18 | 20 | 20 | 20 | 20 | 22 | 22 | 22 | 22 | 24 | 24 | 24 | 24 | 26 | 26 | 26 | 26 | 28 | 28 | 28 | 28 | 30 |
| KG | 17.36 | 17.78 | 18.2 | 18.62 | 19.04 | 19.46 | 19.88 | 20.3 | 20.72 | 21.14 | 21.56 | 21.98 | 22.4 | 22.82 | 23.24 | 23.66 | 24.08 | 24.5 | 24.92 | 25.34 | 25.76 | 26.18 | 26.6 | 27.02 | 27.44 |

# GETB14M
## Single Axis
## Belt Driven



Maximum Stroke 3050 mm | Maximum Speed 2000 mm/s | Motor Output 200W | Belt Width 22 mm | Linear Guide 15X12.5-2 Pc

## Ordering Method

GETB14M - L 40 - 100 - L - M 20 - C 4 - 0001

Model | Belt Type | Lead | Stroke | Motor Position | Motor Brand | Home Sensor | Limit Sensor | Special Order No.

**Belt Type**

| | |
|---|---|
| L | PU Belt |
| X | Rubber Belt |

**Stroke**

| |
|---|
| 100-3050 mm |
| 50 Pitch |

**Motor Position**

| | |
|---|---|
| L | Motor on Left Side |
| LU | Motor on Upper Left Side |
| LD | Motor on Lower Left Side |
| R | Motor on Right Side |
| RU | Motor on Upper Right Side |
| RD | Motor on Lower Right Side |

**Motor Brand**

| | | | |
|---|---|---|---|
| M | Mitsubishi | 10 | - |
| P | Panasonic | 20 | 200W |
| Y | Yaskawa | 40 | - |
| | Delta | 75 | - |

**Home Sensor**

| | |
|---|---|
| External | |
| C | Motor Side |
| D | Opposite Motor Side |
| Without Sensor | |
| E | Without Sensor |

**Limit Sensor**

| | |
|---|---|
| External | |
| 3 | 1 Pc |
| 4 | 2 Pc |
| Without Sensor | |
| 5 | Without Sensor |



Motorized X-Axis ▶ Belt Driven ▶ Linear Drive
GETB14M
GMT GLOBAL INC.
GETB Specifications Introduction

## Specifications

| | | | |
|---|---|---|---|
| Performance | Repeatability (mm) | | ±0.04 |
| | Belt Lead (mm) | | 40 |
| | Maximum Speed (mm / s) | | 2000 |
| | Maximum Load | Horizontal (kg) | 25 |
| | | Vertical (kg) | |
| | Rated Thrust (N) | | 100 |
| | Stroke / Pitch (mm) | | 100-3050 mm / 50 mm Pitch |
| Parts | AC Servo Motor Output (W) | | 200 |
| | Belt Width (mm) | | 22 |
| | High Rigidity Linear Guide (mm) | | 15X12.5 |
| | Home Sensor | External | EE-SX672 (NPN) |

## Sensor Circuit Diagram

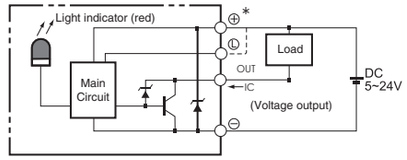


## Allowable Overhang (N.m)

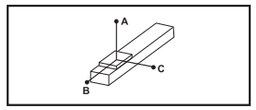


(Unit:mm)

| Horizontal Installation | A | B | C |
|---|---|---|---|
| 10kg | 2700 | 1700 | 1050 |
| 20kg | 2100 | 850 | 650 |
| 25kg | 1700 | 600 | 500 |

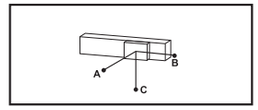


(Unit:mm)

| Wall Installation | A | B | C |
|---|---|---|---|
| 10kg | 1070 | 1200 | 2000 |
| 20kg | 600 | 560 | 1500 |
| 25kg | 410 | 350 | 1150 |

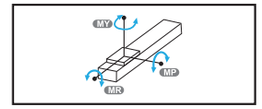


(Unit:N.m)

| Static Loading Moment | |
|---|---|
| MY | 551 |
| MP | 552 |
| MR | 485 |

## Servo Motor Options

| Brand | Mark | Brake | Motor Output | AC-Voltage | Motor Model | Driver Model |
|---|---|---|---|---|---|---|
| Mitsubishi | M | Without Brake (Horizontal Type) | 200 | 220 | HF-KP23 | MR-J3-20A |
| Panasonic | P | Without Brake (Horizontal Type) | 200 | 220 | MHMD022P1S | MADDT1207 |
| Delta | T | Without Brake (Horizontal Type) | 200 | 220 | ECMA-C20602ES | ASD-B20221-B |

# GETB14M
## Single Axis
## Motor on Left Side / Motor on Right Side

### L Motor on Left Side

2D CAD 3D CAD • CAD Download : www.gmtlinear.com •

(Unit:mm)

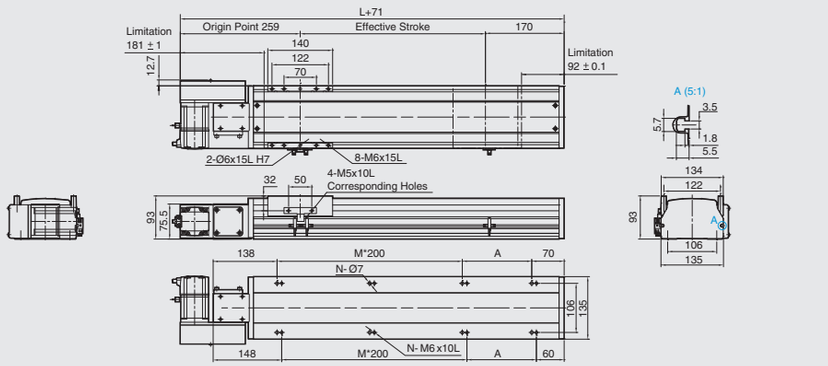


| Stroke | 100 | 150 | 200 | 250 | 300 | 350 | 400 | 450 | 500 | 550 | 600 | 650 | 700 | 750 | 800 | 850 | 900 | 950 | 1000 | 1050 | 1100 | 1150 | 1200 | 1250 | 1300 | 1350 | 1400 | 1450 | 1500 | 1550 |
|---|---|---|---|---|---|---|---|---|---|---|---|---|---|---|---|---|---|---|---|---|---|---|---|---|---|---|---|---|---|---|
| L | 458 | 508 | 558 | 608 | 658 | 708 | 758 | 808 | 858 | 908 | 958 | 1008 | 1058 | 1108 | 1158 | 1208 | 1258 | 1308 | 1358 | 1408 | 1458 | 1508 | 1558 | 1608 | 1658 | 1708 | 1758 | 1808 | 1858 | 1908 |
| A | 50 | 100 | 150 | 200 | 50 | 100 | 150 | 200 | 50 | 100 | 150 | 200 | 50 | 100 | 150 | 200 | 50 | 100 | 150 | 200 | 50 | 100 | 150 | 200 | 50 | 100 | 150 | 200 | 50 | 100 |
| M | 1 | 1 | 1 | 1 | 2 | 2 | 2 | 2 | 3 | 3 | 3 | 3 | 4 | 4 | 4 | 4 | 5 | 5 | 5 | 5 | 6 | 6 | 6 | 6 | 7 | 7 | 7 | 7 | 8 | 8 |
| N | 6 | 6 | 6 | 6 | 8 | 8 | 8 | 8 | 10 | 10 | 10 | 10 | 12 | 12 | 12 | 12 | 14 | 14 | 14 | 14 | 16 | 16 | 16 | 16 | 18 | 18 | 18 | 18 | 20 | 20 |
| KG | 8.6 | 9 | 9.5 | 10 | 10.5 | 11 | 11.4 | 12 | 12.4 | 13 | 13.4 | 13.9 | 14.4 | 14.9 | 15.4 | 15.9 | 16.4 | 16.9 | 17.3 | 17.9 | 18.5 | 19.1 | 19.7 | 20.3 | 20.9 | 21.5 | 22.1 | 22.7 | 23.3 | 23.9 |

| Stroke | 1600 | 1650 | 1700 | 1750 | 1800 | 1850 | 1900 | 1950 | 2000 | 2050 | 2100 | 2150 | 2200 | 2250 | 2300 | 2350 | 2400 | 2450 | 2500 | 2550 | 2600 | 2650 | 2700 | 2750 | 2800 | 2850 | 2900 | 2950 | 3000 | 3050 |
|---|---|---|---|---|---|---|---|---|---|---|---|---|---|---|---|---|---|---|---|---|---|---|---|---|---|---|---|---|---|---|
| L | 1958 | 2008 | 2058 | 2108 | 2158 | 2208 | 2258 | 2308 | 2358 | 2408 | 2458 | 2508 | 2558 | 2608 | 2658 | 2708 | 2758 | 2808 | 2858 | 2908 | 2958 | 3008 | 3058 | 3108 | 3158 | 3208 | 3258 | 3308 | 3358 | 3408 |
| A | 150 | 200 | 50 | 100 | 150 | 200 | 50 | 100 | 150 | 200 | 50 | 100 | 150 | 200 | 50 | 100 | 150 | 200 | 50 | 100 | 150 | 200 | 50 | 100 | 150 | 200 | 50 | 100 | 150 | 200 |
| M | 8 | 8 | 9 | 9 | 9 | 9 | 10 | 10 | 10 | 10 | 11 | 11 | 11 | 11 | 12 | 12 | 12 | 12 | 13 | 13 | 13 | 13 | 14 | 14 | 14 | 14 | 15 | 15 | 15 | 15 |
| N | 20 | 20 | 22 | 22 | 22 | 22 | 24 | 24 | 24 | 26 | 26 | 26 | 28 | 28 | 28 | 28 | 30 | 30 | 30 | 30 | 30 | 30 | 32 | 32 | 32 | 32 | 34 | 34 | 34 | 34 |
| KG | 24.5 | 25.1 | 25.7 | 26.3 | 26.9 | 27.5 | 28.1 | 28.7 | 29.3 | 29.9 | 30.5 | 31.1 | 31.7 | 32.3 | 32.9 | 33.5 | 34.1 | 34.7 | 35.3 | 35.9 | 36.5 | 37.1 | 37.7 | 38.3 | 38.9 | 39.5 | 40.1 | 40.7 | 41.3 | 41.9 |

### R Motor on Right Side

2D CAD 3D CAD • CAD Download : www.gmtlinear.com •

(Unit:mm)

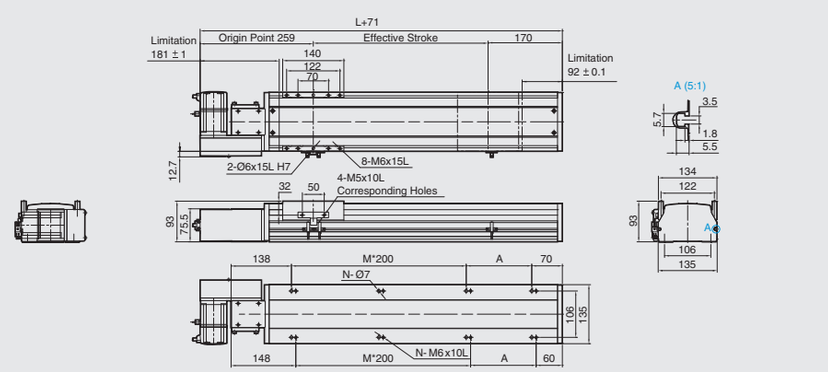


| Stroke | 100 | 150 | 200 | 250 | 300 | 350 | 400 | 450 | 500 | 550 | 600 | 650 | 700 | 750 | 800 | 850 | 900 | 950 | 1000 | 1050 | 1100 | 1150 | 1200 | 1250 | 1300 | 1350 | 1400 | 1450 | 1500 | 1550 |
|---|---|---|---|---|---|---|---|---|---|---|---|---|---|---|---|---|---|---|---|---|---|---|---|---|---|---|---|---|---|---|
| L | 458 | 508 | 558 | 608 | 658 | 708 | 758 | 808 | 858 | 908 | 958 | 1008 | 1058 | 1108 | 1158 | 1208 | 1258 | 1308 | 1358 | 1408 | 1458 | 1508 | 1558 | 1608 | 1658 | 1708 | 1758 | 1808 | 1858 | 1908 |
| A | 50 | 100 | 150 | 200 | 50 | 100 | 150 | 200 | 50 | 100 | 150 | 200 | 50 | 100 | 150 | 200 | 50 | 100 | 150 | 200 | 50 | 100 | 150 | 200 | 50 | 100 | 150 | 200 | 50 | 100 |
| M | 1 | 1 | 1 | 1 | 2 | 2 | 2 | 2 | 3 | 3 | 3 | 3 | 4 | 4 | 4 | 4 | 5 | 5 | 5 | 5 | 6 | 6 | 6 | 6 | 7 | 7 | 7 | 7 | 8 | 8 |
| N | 6 | 6 | 6 | 6 | 8 | 8 | 8 | 8 | 10 | 10 | 10 | 10 | 12 | 12 | 12 | 12 | 14 | 14 | 14 | 14 | 16 | 16 | 16 | 16 | 18 | 18 | 18 | 18 | 20 | 20 |
| KG | 8.6 | 9 | 9.5 | 10 | 10.5 | 11 | 11.4 | 12 | 12.4 | 13 | 13.4 | 13.9 | 14.4 | 14.9 | 15.4 | 15.9 | 16.4 | 16.9 | 17.3 | 17.9 | 18.5 | 19.1 | 19.7 | 20.3 | 20.9 | 21.5 | 22.1 | 22.7 | 23.3 | 23.9 |

| Stroke | 1600 | 1650 | 1700 | 1750 | 1800 | 1850 | 1900 | 1950 | 2000 | 2050 | 2100 | 2150 | 2200 | 2250 | 2300 | 2350 | 2400 | 2450 | 2500 | 2550 | 2600 | 2650 | 2700 | 2750 | 2800 | 2850 | 2900 | 2950 | 3000 | 3050 |
|---|---|---|---|---|---|---|---|---|---|---|---|---|---|---|---|---|---|---|---|---|---|---|---|---|---|---|---|---|---|---|
| L | 1958 | 2008 | 2058 | 2108 | 2158 | 2208 | 2258 | 2308 | 2358 | 2408 | 2458 | 2508 | 2558 | 2608 | 2658 | 2708 | 2758 | 2808 | 2858 | 2908 | 2958 | 3008 | 3058 | 3108 | 3158 | 3208 | 3258 | 3308 | 3358 | 3408 |
| A | 150 | 200 | 50 | 100 | 150 | 200 | 50 | 100 | 150 | 200 | 50 | 100 | 150 | 200 | 50 | 100 | 150 | 200 | 50 | 100 | 150 | 200 | 50 | 100 | 150 | 200 | 50 | 100 | 150 | 200 |
| M | 8 | 8 | 9 | 9 | 9 | 9 | 10 | 10 | 10 | 10 | 11 | 11 | 11 | 11 | 12 | 12 | 12 | 12 | 13 | 13 | 13 | 13 | 14 | 14 | 14 | 14 | 15 | 15 | 15 | 15 |
| N | 20 | 20 | 22 | 22 | 22 | 22 | 24 | 24 | 24 | 24 | 26 | 26 | 26 | 26 | 28 | 28 | 28 | 28 | 30 | 30 | 30 | 30 | 30 | 30 | 32 | 32 | 32 | 32 | 34 | 34 |
| KG | 24.5 | 25.1 | 25.7 | 26.3 | 26.9 | 27.5 | 28.1 | 28.7 | 29.3 | 29.9 | 30.5 | 31.1 | 31.7 | 32.3 | 32.9 | 33.5 | 34.1 | 34.7 | 35.3 | 35.9 | 36.5 | 37.1 | 37.7 | 38.3 | 38.9 | 39.5 | 40.1 | 40.7 | 41.3 | 41.9 |





# GETB14M
## Single Axis
## Motor on Lower Left Side / Motor on Lower Right Side

### LD Motor on Lower Left Side

2D CAD 3D CAD • CAD Download : www.gmtlinear.com •

(Unit:mm)

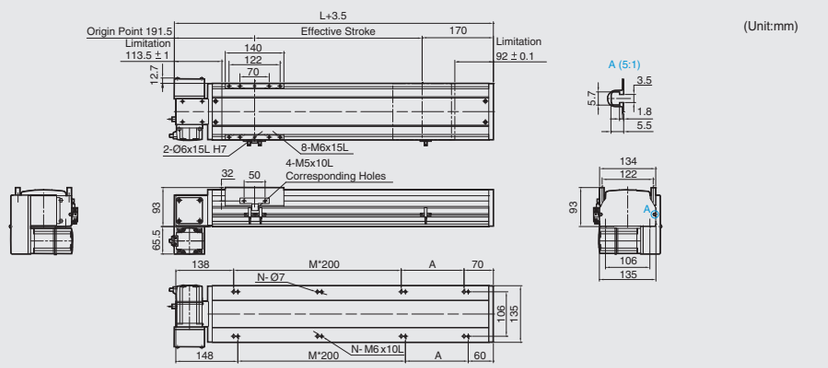


| Stroke | 100 | 150 | 200 | 250 | 300 | 350 | 400 | 450 | 500 | 550 | 600 | 650 | 700 | 750 | 800 | 850 | 900 | 950 | 1000 | 1050 | 1100 | 1150 | 1200 | 1250 | 1300 | 1350 | 1400 | 1450 | 1500 | 1550 |
|---|---|---|---|---|---|---|---|---|---|---|---|---|---|---|---|---|---|---|---|---|---|---|---|---|---|---|---|---|---|---|
| L | 458 | 508 | 558 | 608 | 658 | 708 | 758 | 808 | 858 | 908 | 958 | 1008 | 1058 | 1108 | 1158 | 1208 | 1258 | 1308 | 1358 | 1408 | 1458 | 1508 | 1558 | 1608 | 1658 | 1708 | 1758 | 1808 | 1858 | 1908 |
| A | 50 | 100 | 150 | 200 | 50 | 100 | 150 | 200 | 50 | 100 | 150 | 200 | 50 | 100 | 150 | 200 | 50 | 100 | 150 | 200 | 50 | 100 | 150 | 200 | 50 | 100 | 150 | 200 | 50 | 100 |
| M | 1 | 1 | 1 | 1 | 2 | 2 | 2 | 2 | 3 | 3 | 3 | 3 | 4 | 4 | 4 | 4 | 5 | 5 | 5 | 5 | 6 | 6 | 6 | 6 | 7 | 7 | 7 | 7 | 8 | 8 |
| N | 6 | 6 | 6 | 6 | 8 | 8 | 8 | 8 | 10 | 10 | 10 | 10 | 12 | 12 | 12 | 12 | 14 | 14 | 14 | 14 | 16 | 16 | 16 | 16 | 18 | 18 | 18 | 18 | 20 | 20 |
| KG | 8.6 | 9 | 9.5 | 10 | 10.5 | 11 | 11.4 | 12 | 12.4 | 13 | 13.4 | 13.9 | 14.4 | 14.9 | 15.4 | 15.9 | 16.4 | 16.9 | 17.3 | 17.9 | 18.5 | 19.1 | 19.7 | 20.3 | 20.9 | 21.5 | 22.1 | 22.7 | 23.3 | 23.9 |

| Stroke | 1600 | 1650 | 1700 | 1750 | 1800 | 1850 | 1900 | 1950 | 2000 | 2050 | 2100 | 2150 | 2200 | 2250 | 2300 | 2350 | 2400 | 2450 | 2500 | 2550 | 2600 | 2650 | 2700 | 2750 | 2800 | 2850 | 2900 | 2950 | 3000 | 3050 |
|---|---|---|---|---|---|---|---|---|---|---|---|---|---|---|---|---|---|---|---|---|---|---|---|---|---|---|---|---|---|---|
| L | 1958 | 2008 | 2058 | 2108 | 2158 | 2208 | 2258 | 2308 | 2358 | 2408 | 2458 | 2508 | 2558 | 2608 | 2658 | 2708 | 2758 | 2808 | 2858 | 2908 | 2958 | 3008 | 3058 | 3108 | 3158 | 3208 | 3258 | 3308 | 3358 | 3408 |
| A | 150 | 200 | 50 | 100 | 150 | 200 | 50 | 100 | 150 | 200 | 50 | 100 | 150 | 200 | 50 | 100 | 150 | 200 | 50 | 100 | 150 | 200 | 50 | 100 | 150 | 200 | 50 | 100 | 150 | 200 |
| M | 8 | 8 | 9 | 9 | 9 | 9 | 10 | 10 | 10 | 10 | 11 | 11 | 11 | 11 | 12 | 12 | 12 | 12 | 13 | 13 | 13 | 13 | 14 | 14 | 14 | 14 | 15 | 15 | 15 | 15 |
| N | 20 | 20 | 22 | 22 | 22 | 22 | 24 | 24 | 24 | 24 | 26 | 26 | 26 | 26 | 28 | 28 | 28 | 28 | 30 | 30 | 30 | 30 | 30 | 30 | 32 | 32 | 32 | 32 | 34 | 34 |
| KG | 24.5 | 25.1 | 25.7 | 26.3 | 26.9 | 27.5 | 28.1 | 28.7 | 29.3 | 29.9 | 30.5 | 31.1 | 31.7 | 32.3 | 32.9 | 33.5 | 34.1 | 34.7 | 35.3 | 35.9 | 36.5 | 37.1 | 37.7 | 38.3 | 38.9 | 39.5 | 40.1 | 40.7 | 41.3 | 41.9 |

### RD Motor on Lower Right Side

2D CAD 3D CAD • CAD Download : www.gmtlinear.com •

(Unit:mm)

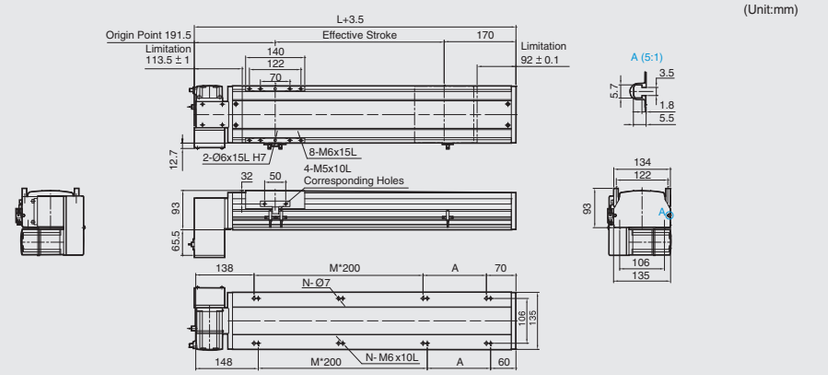


| Stroke | 100 | 150 | 200 | 250 | 300 | 350 | 400 | 450 | 500 | 550 | 600 | 650 | 700 | 750 | 800 | 850 | 900 | 950 | 1000 | 1050 | 1100 | 1150 | 1200 | 1250 | 1300 | 1350 | 1400 | 1450 | 1500 | 1550 |
|---|---|---|---|---|---|---|---|---|---|---|---|---|---|---|---|---|---|---|---|---|---|---|---|---|---|---|---|---|---|---|
| L | 458 | 508 | 558 | 608 | 658 | 708 | 758 | 808 | 858 | 908 | 958 | 1008 | 1058 | 1108 | 1158 | 1208 | 1258 | 1308 | 1358 | 1408 | 1458 | 1508 | 1558 | 1608 | 1658 | 1708 | 1758 | 1808 | 1858 | 1908 |
| A | 50 | 100 | 150 | 200 | 50 | 100 | 150 | 200 | 50 | 100 | 150 | 200 | 50 | 100 | 150 | 200 | 50 | 100 | 150 | 200 | 50 | 100 | 150 | 200 | 50 | 100 | 150 | 200 | 50 | 100 |
| M | 1 | 1 | 1 | 1 | 2 | 2 | 2 | 2 | 3 | 3 | 3 | 3 | 4 | 4 | 4 | 4 | 5 | 5 | 5 | 5 | 6 | 6 | 6 | 6 | 7 | 7 | 7 | 7 | 8 | 8 |
| N | 6 | 6 | 6 | 6 | 8 | 8 | 8 | 8 | 10 | 10 | 10 | 10 | 12 | 12 | 12 | 12 | 14 | 14 | 14 | 14 | 16 | 16 | 16 | 16 | 18 | 18 | 18 | 18 | 20 | 20 |
| KG | 8.6 | 9 | 9.5 | 10 | 10.5 | 11 | 11.4 | 12 | 12.4 | 13 | 13.4 | 13.9 | 14.4 | 14.9 | 15.4 | 15.9 | 16.4 | 16.9 | 17.3 | 17.9 | 18.5 | 19.1 | 19.7 | 20.3 | 20.9 | 21.5 | 22.1 | 22.7 | 23.3 | 23.9 |

| Stroke | 1600 | 1650 | 1700 | 1750 | 1800 | 1850 | 1900 | 1950 | 2000 | 2050 | 2100 | 2150 | 2200 | 2250 | 2300 | 2350 | 2400 | 2450 | 2500 | 2550 | 2600 | 2650 | 2700 | 2750 | 2800 | 2850 | 2900 | 2950 | 3000 | 3050 |
|---|---|---|---|---|---|---|---|---|---|---|---|---|---|---|---|---|---|---|---|---|---|---|---|---|---|---|---|---|---|---|
| L | 1958 | 2008 | 2058 | 2108 | 2158 | 2208 | 2258 | 2308 | 2358 | 2408 | 2458 | 2508 | 2558 | 2608 | 2658 | 2708 | 2758 | 2808 | 2858 | 2908 | 2958 | 3008 | 3058 | 3108 | 3158 | 3208 | 3258 | 3308 | 3358 | 3408 |
| A | 150 | 200 | 50 | 100 | 150 | 200 | 50 | 100 | 150 | 200 | 50 | 100 | 150 | 200 | 50 | 100 | 150 | 200 | 50 | 100 | 150 | 200 | 50 | 100 | 150 | 200 | 50 | 100 | 150 | 200 |
| M | 8 | 8 | 9 | 9 | 9 | 9 | 10 | 10 | 10 | 10 | 11 | 11 | 11 | 11 | 12 | 12 | 12 | 12 | 13 | 13 | 13 | 13 | 14 | 14 | 14 | 14 | 15 | 15 | 15 | 15 |
| N | 20 | 20 | 22 | 22 | 22 | 22 | 24 | 24 | 24 | 24 | 26 | 26 | 26 | 26 | 28 | 28 | 28 | 28 | 30 | 30 | 30 | 30 | 30 | 30 | 32 | 32 | 32 | 32 | 34 | 34 |
| KG | 24.5 | 25.1 | 25.7 | 26.3 | 26.9 | 27.5 | 28.1 | 28.7 | 29.3 | 29.9 | 30.5 | 31.1 | 31.7 | 32.3 | 32.9 | 33.5 | 34.1 | 34.7 | 35.3 | 35.9 | 36.5 | 37.1 | 37.7 | 38.3 | 38.9 | 39.5 | 40.1 | 40.7 | 41.3 | 41.9 |

# GETB14M
## Single Axis
## Motor on Upper Left Side / Motor on Upper Right Side

### LU Motor on Upper Left Side

2D CAD 3D CAD • CAD Download : www.gmtlinear.com •

(Unit:mm)

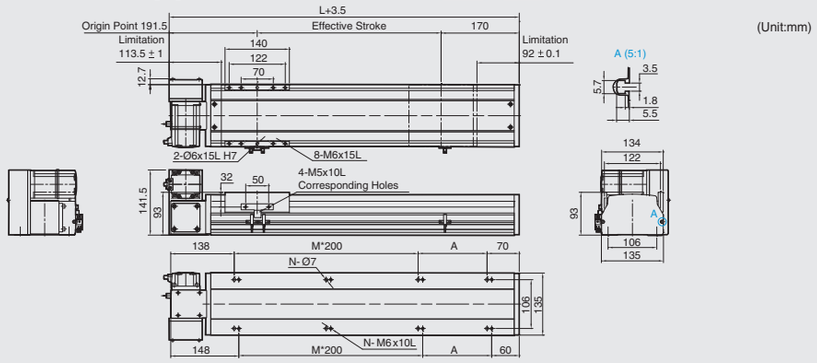


| Stroke | 100 | 150 | 200 | 250 | 300 | 350 | 400 | 450 | 500 | 550 | 600 | 650 | 700 | 750 | 800 | 850 | 900 | 950 | 1000 | 1050 | 1100 | 1150 | 1200 | 1250 | 1300 | 1350 | 1400 | 1450 | 1500 | 1550 |
|---|---|---|---|---|---|---|---|---|---|---|---|---|---|---|---|---|---|---|---|---|---|---|---|---|---|---|---|---|---|---|
| L | 458 | 508 | 558 | 608 | 658 | 708 | 758 | 808 | 858 | 908 | 958 | 1008 | 1058 | 1108 | 1158 | 1208 | 1258 | 1308 | 1358 | 1408 | 1458 | 1508 | 1558 | 1608 | 1658 | 1708 | 1758 | 1808 | 1858 | 1908 |
| A | 50 | 100 | 150 | 200 | 50 | 100 | 150 | 200 | 50 | 100 | 150 | 200 | 50 | 100 | 150 | 200 | 50 | 100 | 150 | 200 | 50 | 100 | 150 | 200 | 50 | 100 | 150 | 200 | 50 | 100 |
| M | 1 | 1 | 1 | 1 | 2 | 2 | 2 | 2 | 3 | 3 | 3 | 3 | 4 | 4 | 4 | 4 | 5 | 5 | 5 | 5 | 6 | 6 | 6 | 6 | 7 | 7 | 7 | 7 | 8 | 8 |
| N | 6 | 6 | 6 | 6 | 8 | 8 | 8 | 8 | 10 | 10 | 10 | 10 | 12 | 12 | 12 | 12 | 14 | 14 | 14 | 14 | 16 | 16 | 16 | 16 | 18 | 18 | 18 | 18 | 20 | 20 |
| KG | 8.6 | 9 | 9.5 | 10 | 10.5 | 11 | 11.4 | 12 | 12.4 | 13 | 13.4 | 13.9 | 14.4 | 14.9 | 15.4 | 15.9 | 16.4 | 16.9 | 17.3 | 17.9 | 18.5 | 19.1 | 19.7 | 20.3 | 20.9 | 21.5 | 22.1 | 22.7 | 23.3 | 23.9 |

| Stroke | 1600 | 1650 | 1700 | 1750 | 1800 | 1850 | 1900 | 1950 | 2000 | 2050 | 2100 | 2150 | 2200 | 2250 | 2300 | 2350 | 2400 | 2450 | 2500 | 2550 | 2600 | 2650 | 2700 | 2750 | 2800 | 2850 | 2900 | 2950 | 3000 | 3050 |
|---|---|---|---|---|---|---|---|---|---|---|---|---|---|---|---|---|---|---|---|---|---|---|---|---|---|---|---|---|---|---|
| L | 1958 | 2008 | 2058 | 2108 | 2158 | 2208 | 2258 | 2308 | 2358 | 2408 | 2458 | 2508 | 2558 | 2608 | 2658 | 2708 | 2758 | 2808 | 2858 | 2908 | 2958 | 3008 | 3058 | 3108 | 3158 | 3208 | 3258 | 3308 | 3358 | 3408 |
| A | 150 | 200 | 50 | 100 | 150 | 200 | 50 | 100 | 150 | 200 | 50 | 100 | 150 | 200 | 50 | 100 | 150 | 200 | 50 | 100 | 150 | 200 | 50 | 100 | 150 | 200 | 50 | 100 | 150 | 200 |
| M | 8 | 8 | 9 | 9 | 9 | 9 | 10 | 10 | 10 | 10 | 11 | 11 | 11 | 11 | 12 | 12 | 12 | 12 | 13 | 13 | 13 | 13 | 14 | 14 | 14 | 14 | 15 | 15 | 15 | 15 |
| N | 20 | 20 | 22 | 22 | 22 | 22 | 24 | 24 | 24 | 24 | 26 | 26 | 26 | 26 | 28 | 28 | 28 | 28 | 30 | 30 | 30 | 30 | 32 | 32 | 32 | 32 | 34 | 34 | 34 | 34 |
| KG | 24.5 | 25.1 | 25.7 | 26.3 | 26.9 | 27.5 | 28.1 | 28.7 | 29.3 | 29.9 | 30.5 | 31.1 | 31.7 | 32.3 | 32.9 | 33.5 | 34.1 | 34.7 | 35.3 | 35.9 | 36.5 | 37.1 | 37.7 | 38.3 | 38.9 | 39.5 | 40.1 | 40.7 | 41.3 | 41.9 |

### RU Motor on Upper Right Side

2D CAD 3D CAD • CAD Download : www.gmtlinear.com •

(Unit:mm)

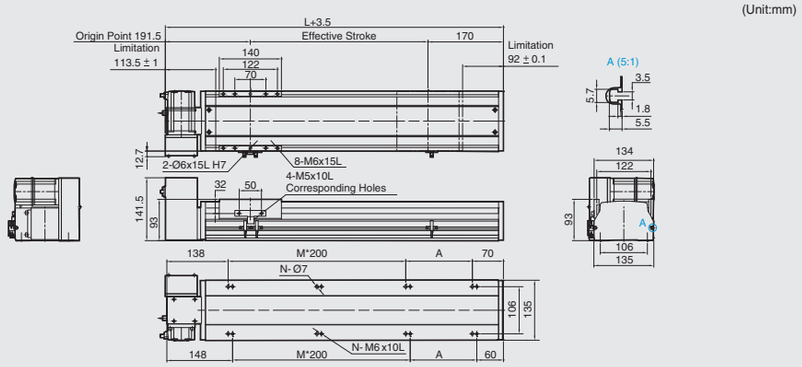


| Stroke | 100 | 150 | 200 | 250 | 300 | 350 | 400 | 450 | 500 | 550 | 600 | 650 | 700 | 750 | 800 | 850 | 900 | 950 | 1000 | 1050 | 1100 | 1150 | 1200 | 1250 | 1300 | 1350 | 1400 | 1450 | 1500 | 1550 |
|---|---|---|---|---|---|---|---|---|---|---|---|---|---|---|---|---|---|---|---|---|---|---|---|---|---|---|---|---|---|---|
| L | 458 | 508 | 558 | 608 | 658 | 708 | 758 | 808 | 858 | 908 | 958 | 1008 | 1058 | 1108 | 1158 | 1208 | 1258 | 1308 | 1358 | 1408 | 1458 | 1508 | 1558 | 1608 | 1658 | 1708 | 1758 | 1808 | 1858 | 1908 |
| A | 50 | 100 | 150 | 200 | 50 | 100 | 150 | 200 | 50 | 100 | 150 | 200 | 50 | 100 | 150 | 200 | 50 | 100 | 150 | 200 | 50 | 100 | 150 | 200 | 50 | 100 | 150 | 200 | 50 | 100 |
| M | 1 | 1 | 1 | 1 | 2 | 2 | 2 | 2 | 3 | 3 | 3 | 3 | 4 | 4 | 4 | 4 | 5 | 5 | 5 | 5 | 6 | 6 | 6 | 6 | 7 | 7 | 7 | 7 | 8 | 8 |
| N | 6 | 6 | 6 | 6 | 8 | 8 | 8 | 8 | 10 | 10 | 10 | 10 | 12 | 12 | 12 | 12 | 14 | 14 | 14 | 14 | 16 | 16 | 16 | 16 | 18 | 18 | 18 | 18 | 20 | 20 |
| KG | 8.6 | 9 | 9.5 | 10 | 10.5 | 11 | 11.4 | 12 | 12.4 | 13 | 13.4 | 13.9 | 14.4 | 14.9 | 15.4 | 15.9 | 16.4 | 16.9 | 17.3 | 17.9 | 18.5 | 19.1 | 19.7 | 20.3 | 20.9 | 21.5 | 22.1 | 22.7 | 23.3 | 23.9 |

| Stroke | 1600 | 1650 | 1700 | 1750 | 1800 | 1850 | 1900 | 1950 | 2000 | 2050 | 2100 | 2150 | 2200 | 2250 | 2300 | 2350 | 2400 | 2450 | 2500 | 2550 | 2600 | 2650 | 2700 | 2750 | 2800 | 2850 | 2900 | 2950 | 3000 | 3050 |
|---|---|---|---|---|---|---|---|---|---|---|---|---|---|---|---|---|---|---|---|---|---|---|---|---|---|---|---|---|---|---|
| L | 1958 | 2008 | 2058 | 2108 | 2158 | 2208 | 2258 | 2308 | 2358 | 2408 | 2458 | 2508 | 2558 | 2608 | 2658 | 2708 | 2758 | 2808 | 2858 | 2908 | 2958 | 3008 | 3058 | 3108 | 3158 | 3208 | 3258 | 3308 | 3358 | 3408 |
| A | 150 | 200 | 50 | 100 | 150 | 200 | 50 | 100 | 150 | 200 | 50 | 100 | 150 | 200 | 50 | 100 | 150 | 200 | 50 | 100 | 150 | 200 | 50 | 100 | 150 | 200 | 50 | 100 | 150 | 200 |
| M | 8 | 8 | 9 | 9 | 9 | 9 | 10 | 10 | 10 | 10 | 11 | 11 | 11 | 11 | 12 | 12 | 12 | 12 | 13 | 13 | 13 | 13 | 14 | 14 | 14 | 14 | 15 | 15 | 15 | 15 |
| N | 20 | 20 | 22 | 22 | 22 | 22 | 24 | 24 | 24 | 24 | 26 | 26 | 26 | 26 | 28 | 28 | 28 | 28 | 30 | 30 | 30 | 30 | 32 | 32 | 32 | 32 | 34 | 34 | 34 | 34 |
| KG | 24.5 | 25.1 | 25.7 | 26.3 | 26.9 | 27.5 | 28.1 | 28.7 | 29.3 | 29.9 | 30.5 | 31.1 | 31.7 | 32.3 | 32.9 | 33.5 | 34.1 | 34.7 | 35.3 | 35.9 | 36.5 | 37.1 | 37.7 | 38.3 | 38.9 | 39.5 | 40.1 | 40.7 | 41.3 | 41.9 |

# GETB17M
## Single Axis
## Belt Driven

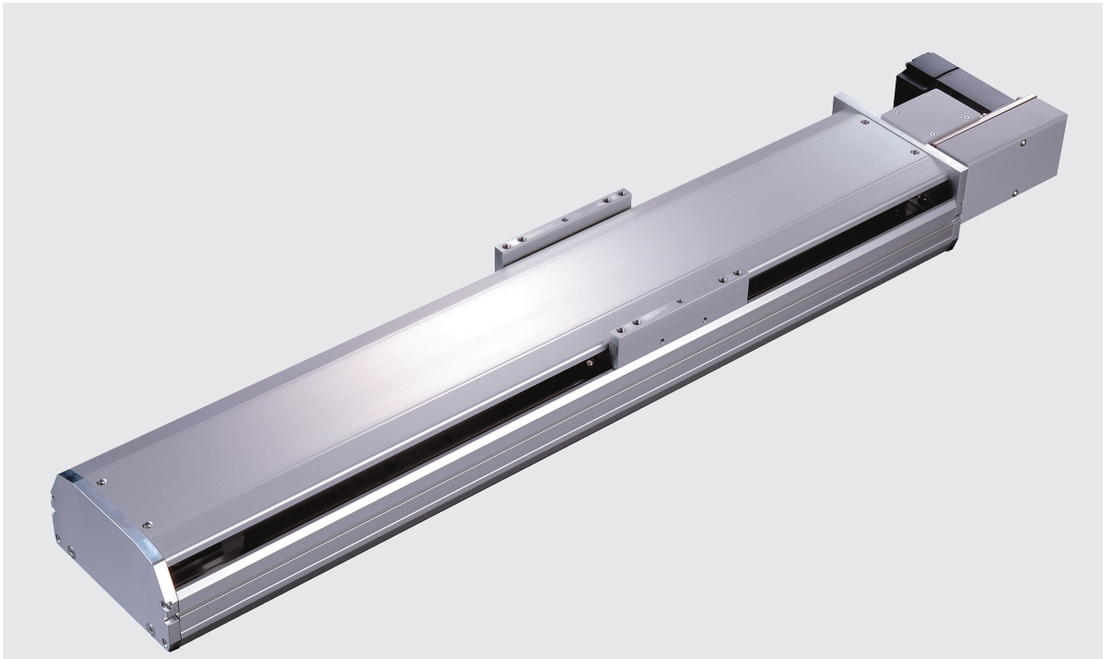

Maximum Stroke 4050 mm | Maximum Speed 2000 mm/s | Motor Output 400W | Belt Width 30 mm | Linear Guide 20X15-2 PC

## Ordering Method

GETB17M - L 40 - 100 - L - M 40 - C 4 - 0001

Model

**Belt Type**

| | |
|---|---|
| L | PU Belt |
| X | Rubber Belt |

**Lead**

**Stroke**

| |
|---|
| 100-4050 mm |
| 50 Pitch |

**Motor Position**

| | |
|---|---|
| L | Motor on Left Side |
| LU | Motor on Upper Left Side |
| LD | Motor on Lower Left Side |
| R | Motor on Right Side |
| RU | Motor on Upper Right Side |
| RD | Motor on Lower Right Side |

**Motor Brand**

| | | | |
|---|---|---|---|
| M | Mitsubishi | 10 | - |
| P | Panasonic | 20 | - |
| Y | Yaskawa | 40 | 400W |
| T | Delta | 75 | - |

**Home Sensor**

| | |
|---|---|
| External | |
| C | Motor Side |
| D | Opposite Motor Side |
| Without Sensor | |
| E | Without Sensor |

**Limit Sensor**

| | |
|---|---|
| External | |
| 3 | 1 Pc |
| 4 | 2 Pc |
| Without Sensor | |
| 5 | Without Sensor |

Special Order No.





## Specifications

| | | | |
|---|---|---|---|
| Performance | Repeatability (mm) | | ±0.04 |
| | Belt Lead (mm) | | 40 |
| | Maximum Speed (mm / s) | | 2000 |
| | Maximum Load | Horizontal (kg) | 45 |
| | | Vertical (kg) | |
| | Rated Thrust (N) | | 204 |
| | Stroke / Pitch (mm) | | 100-4050 mm / 50 mm Pitch |
| Parts | AC Servo Motor Output (W) | | 400 |
| | Belt Width (mm) | | 30 |
| | High Rigidity Linear Guide (mm) | | 20X15 |
| | Home Sensor | External | EE-SX672 (NPN) |

## Sensor Circuit Diagram

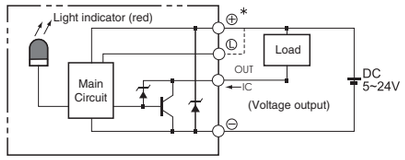


## Allowable Overhang (N.m)

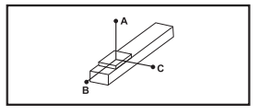


(Unit:mm)

| Horizontal Installation | A | B | C |
|---|---|---|---|
| 10kg | 3000 | 1900 | 1300 |
| 20kg | 2300 | 1000 | 800 |
| 30kg | 2000 | 700 | 600 |
| 45kg | 900 | 320 | 290 |

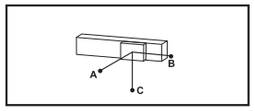


(Unit:mm)

| Wall Installation | A | B | C |
|---|---|---|---|
| 10kg | 1300 | 1500 | 2300 |
| 20kg | 800 | 700 | 1750 |
| 30kg | 600 | 450 | 1350 |
| 45kg | 290 | 210 | 610 |

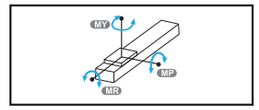


(Unit:N.m)

| Static Loading Moment | |
|---|---|
| MY | 1032 |
| MP | 1034 |
| MR | 908 |

## Servo Motor Options

| Brand | Mark | Brake | Motor Output | AC-Voltage | Motor Model | Driver Model |
|---|---|---|---|---|---|---|
| Mitsubishi | M | Without Brake (Horizontal Type) | 400 | 220 | HF-KP43 | MR-J3-40A |
| Panasonic | P | Without Brake (Horizontal Type) | 400 | 220 | MHMD042P1S | MBDDT2210 |
| Delta | T | Without Brake (Horizontal Type) | 400 | 220 | ECMA-C20604ES | ASD-B20421-B |

# GETB17M
## Single Axis
## Motor on Left Side / Motor on Right Side

### L Motor on Left Side

2D CAD 3D CAD • CAD Download : www.gmtlinear.com •

(Unit:mm)

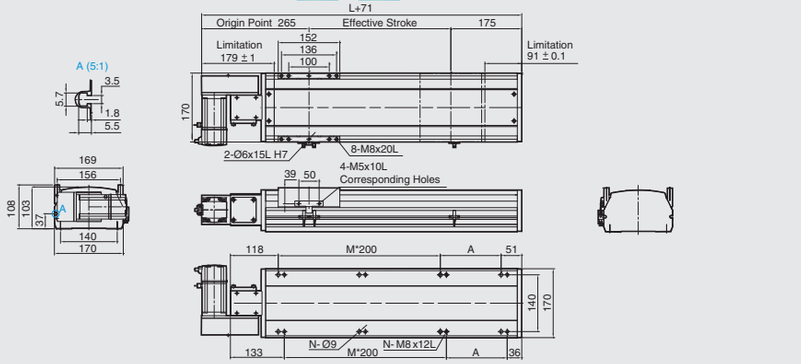


| Stroke | 100 | 150 | 200 | 250 | 300 | 350 | 400 | 450 | 500 | 550 | 600 | 650 | 700 | 750 | 800 | 850 | 900 | 950 | 1000 | 1050 | 1100 | 1150 | 1200 | 1250 | 1300 | 1350 | 1400 | 1450 | 1500 | 1550 |
|---|---|---|---|---|---|---|---|---|---|---|---|---|---|---|---|---|---|---|---|---|---|---|---|---|---|---|---|---|---|---|
| L | 469 | 519 | 569 | 619 | 669 | 719 | 769 | 819 | 869 | 919 | 969 | 1019 | 1069 | 1119 | 1169 | 1219 | 1269 | 1319 | 1369 | 1419 | 1469 | 1519 | 1569 | 1619 | 1669 | 1719 | 1769 | 1819 | 1869 | 1919 |
| A | 100 | 150 | 200 | 50 | 100 | 150 | 200 | 50 | 100 | 150 | 200 | 50 | 100 | 150 | 200 | 50 | 100 | 150 | 200 | 50 | 100 | 150 | 200 | 50 | 100 | 150 | 200 | 50 | 100 | 150 |
| M | 1 | 1 | 1 | 2 | 2 | 2 | 2 | 3 | 3 | 3 | 3 | 4 | 4 | 4 | 4 | 5 | 5 | 5 | 5 | 6 | 6 | 6 | 6 | 7 | 7 | 7 | 7 | 8 | 8 | 8 |
| N | 6 | 6 | 6 | 8 | 8 | 8 | 8 | 10 | 10 | 10 | 10 | 12 | 12 | 12 | 12 | 14 | 14 | 14 | 14 | 16 | 16 | 16 | 16 | 18 | 18 | 18 | 18 | 20 | 20 | 20 |
| KG | 12 | 13.8 | 14.6 | 15.4 | 16.1 | 16.9 | 17.7 | 18.5 | 19.2 | 20 | 20.8 | 21.6 | 22.3 | 23.1 | 23.9 | 24.7 | 25.4 | 26.2 | 27 | 27.8 | 28.6 | 29.4 | 30.2 | 31 | 31.8 | 32.6 | 33.4 | 34.2 | 35 | 35.8 |

| Stroke | 1600 | 1650 | 1700 | 1750 | 1800 | 1850 | 1900 | 1950 | 2000 | 2050 | 2100 | 2150 | 2200 | 2250 | 2300 | 2350 | 2400 | 2450 | 2500 | 2550 | 2600 | 2650 | 2700 | 2750 | 2800 | 2850 | 2900 | 2950 | 3000 | 3050 |
|---|---|---|---|---|---|---|---|---|---|---|---|---|---|---|---|---|---|---|---|---|---|---|---|---|---|---|---|---|---|---|
| L | 1969 | 2019 | 2069 | 2119 | 2169 | 2219 | 2269 | 2319 | 2369 | 2419 | 2469 | 2519 | 2569 | 2619 | 2669 | 2719 | 2769 | 2819 | 2869 | 2919 | 2969 | 3019 | 3069 | 3119 | 3169 | 3219 | 3269 | 3319 | 3369 | 3419 |
| A | 200 | 50 | 100 | 150 | 200 | 50 | 100 | 150 | 200 | 50 | 100 | 150 | 200 | 50 | 100 | 150 | 200 | 50 | 100 | 150 | 200 | 50 | 100 | 150 | 200 | 50 | 100 | 150 | 200 | 50 |
| M | 8 | 9 | 9 | 9 | 9 | 10 | 10 | 10 | 10 | 11 | 11 | 11 | 11 | 12 | 12 | 12 | 12 | 13 | 13 | 13 | 13 | 14 | 14 | 14 | 14 | 15 | 15 | 15 | 15 | 16 |
| N | 20 | 22 | 22 | 22 | 22 | 24 | 24 | 24 | 24 | 26 | 26 | 26 | 26 | 28 | 28 | 28 | 28 | 30 | 30 | 30 | 30 | 32 | 32 | 32 | 32 | 34 | 34 | 34 | 34 | 36 |
| KG | 36.6 | 37.4 | 38.2 | 39 | 39.8 | 40.6 | 41.4 | 42.2 | 43 | 43.8 | 44.6 | 45.4 | 46.2 | 47 | 47.8 | 48.6 | 49.4 | 50.2 | 51 | 51.8 | 52.6 | 53.4 | 54.2 | 55 | 55.8 | 56.6 | 57.4 | 58.2 | 59 | 59.8 |

### R Motor on Right Side

2D CAD 3D CAD • CAD Download : www.gmtlinear.com •

(Unit:mm)

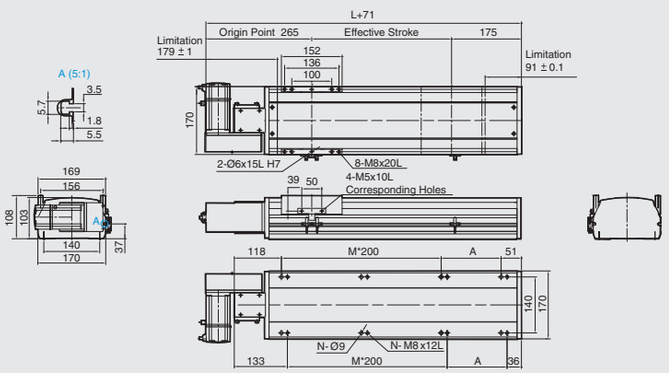


| Stroke | 100 | 150 | 200 | 250 | 300 | 350 | 400 | 450 | 500 | 550 | 600 | 650 | 700 | 750 | 800 | 850 | 900 | 950 | 1000 | 1050 | 1100 | 1150 | 1200 | 1250 | 1300 | 1350 | 1400 | 1450 | 1500 | 1550 |
|---|---|---|---|---|---|---|---|---|---|---|---|---|---|---|---|---|---|---|---|---|---|---|---|---|---|---|---|---|---|---|
| L | 469 | 519 | 569 | 619 | 669 | 719 | 769 | 819 | 869 | 919 | 969 | 1019 | 1069 | 1119 | 1169 | 1219 | 1269 | 1319 | 1369 | 1419 | 1469 | 1519 | 1569 | 1619 | 1669 | 1719 | 1769 | 1819 | 1869 | 1919 |
| A | 100 | 150 | 200 | 50 | 100 | 150 | 200 | 50 | 100 | 150 | 200 | 50 | 100 | 150 | 200 | 50 | 100 | 150 | 200 | 50 | 100 | 150 | 200 | 50 | 100 | 150 | 200 | 50 | 100 | 150 |
| M | 1 | 1 | 1 | 2 | 2 | 2 | 2 | 3 | 3 | 3 | 3 | 4 | 4 | 4 | 4 | 5 | 5 | 5 | 5 | 6 | 6 | 6 | 6 | 7 | 7 | 7 | 7 | 8 | 8 | 8 |
| N | 6 | 6 | 6 | 8 | 8 | 8 | 8 | 10 | 10 | 10 | 10 | 12 | 12 | 12 | 12 | 14 | 14 | 14 | 14 | 16 | 16 | 16 | 16 | 18 | 18 | 18 | 18 | 20 | 20 | 20 |
| KG | 12 | 13.8 | 14.6 | 15.4 | 16.1 | 16.9 | 17.7 | 18.5 | 19.2 | 20 | 20.8 | 21.6 | 22.3 | 23.1 | 23.9 | 24.7 | 25.4 | 26.2 | 27 | 27.8 | 28.6 | 29.4 | 30.2 | 31 | 31.8 | 32.6 | 33.4 | 34.2 | 35 | 35.8 |

| Stroke | 1600 | 1650 | 1700 | 1750 | 1800 | 1850 | 1900 | 1950 | 2000 | 2050 | 2100 | 2150 | 2200 | 2250 | 2300 | 2350 | 2400 | 2450 | 2500 | 2550 | 2600 | 2650 | 2700 | 2750 | 2800 | 2850 | 2900 | 2950 | 3000 | 3050 |
|---|---|---|---|---|---|---|---|---|---|---|---|---|---|---|---|---|---|---|---|---|---|---|---|---|---|---|---|---|---|---|
| L | 1969 | 2019 | 2069 | 2119 | 2169 | 2219 | 2269 | 2319 | 2369 | 2419 | 2469 | 2519 | 2569 | 2619 | 2669 | 2719 | 2769 | 2819 | 2869 | 2919 | 2969 | 3019 | 3069 | 3119 | 3169 | 3219 | 3269 | 3319 | 3369 | 3419 |
| A | 200 | 50 | 100 | 150 | 200 | 50 | 100 | 150 | 200 | 50 | 100 | 150 | 200 | 50 | 100 | 150 | 200 | 50 | 100 | 150 | 200 | 50 | 100 | 150 | 200 | 50 | 100 | 150 | 200 | 50 |
| M | 8 | 9 | 9 | 9 | 9 | 10 | 10 | 10 | 10 | 11 | 11 | 11 | 11 | 12 | 12 | 12 | 12 | 13 | 13 | 13 | 13 | 14 | 14 | 14 | 14 | 15 | 15 | 15 | 15 | 16 |
| N | 20 | 22 | 22 | 22 | 22 | 24 | 24 | 24 | 24 | 26 | 26 | 26 | 26 | 28 | 28 | 28 | 28 | 30 | 30 | 30 | 30 | 32 | 32 | 32 | 32 | 34 | 34 | 34 | 34 | 36 |
| KG | 36.6 | 37.4 | 38.2 | 39 | 39.8 | 40.6 | 41.4 | 42.2 | 43 | 43.8 | 44.6 | 45.4 | 46.2 | 47 | 47.8 | 48.6 | 49.4 | 50.2 | 51 | 51.8 | 52.6 | 53.4 | 54.2 | 55 | 55.8 | 56.6 | 57.4 | 58.2 | 59 | 59.8 |





# GETB17M
## Single Axis
## Motor on Lower Left Side / Motor on Lower Right Side

### LD Motor on Lower Left Side

2D CAD 3D CAD • CAD Download : www.gmtlinear.com •

(Unit:mm)

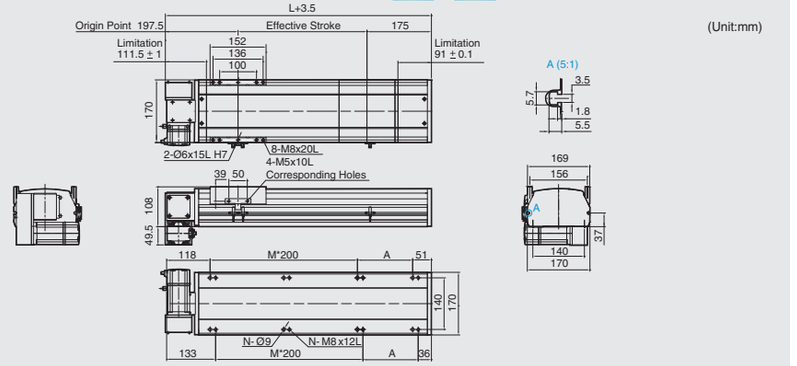


| Stroke | 100 | 150 | 200 | 250 | 300 | 350 | 400 | 450 | 500 | 550 | 600 | 650 | 700 | 750 | 800 | 850 | 900 | 950 | 1000 | 1050 | 1100 | 1150 | 1200 | 1250 | 1300 | 1350 | 1400 | 1450 | 1500 | 1550 |
|---|---|---|---|---|---|---|---|---|---|---|---|---|---|---|---|---|---|---|---|---|---|---|---|---|---|---|---|---|---|---|
| L | 469 | 519 | 569 | 619 | 669 | 719 | 769 | 819 | 869 | 919 | 969 | 1019 | 1069 | 1119 | 1169 | 1219 | 1269 | 1319 | 1369 | 1419 | 1469 | 1519 | 1569 | 1619 | 1669 | 1719 | 1769 | 1819 | 1869 | 1919 |
| A | 100 | 150 | 200 | 50 | 100 | 150 | 200 | 50 | 100 | 150 | 200 | 50 | 100 | 150 | 200 | 50 | 100 | 150 | 200 | 50 | 100 | 150 | 200 | 50 | 100 | 150 | 200 | 50 | 100 | 150 |
| M | 1 | 1 | 1 | 2 | 2 | 2 | 2 | 3 | 3 | 3 | 3 | 4 | 4 | 4 | 4 | 5 | 5 | 5 | 5 | 6 | 6 | 6 | 6 | 7 | 7 | 7 | 7 | 8 | 8 | 8 |
| N | 6 | 6 | 6 | 8 | 8 | 8 | 8 | 10 | 10 | 10 | 10 | 12 | 12 | 12 | 12 | 14 | 14 | 14 | 14 | 16 | 16 | 16 | 16 | 18 | 18 | 18 | 18 | 20 | 20 | 20 |
| KG | 12 | 13.8 | 14.6 | 15.4 | 16.1 | 16.9 | 17.7 | 18.5 | 19.2 | 20 | 20.8 | 21.6 | 22.3 | 23.1 | 23.9 | 24.7 | 25.4 | 26.2 | 27 | 27.8 | 28.6 | 29.4 | 30.2 | 31 | 31.8 | 32.6 | 33.4 | 34.2 | 35 | 35.8 |

| Stroke | 1600 | 1650 | 1700 | 1750 | 1800 | 1850 | 1900 | 1950 | 2000 | 2050 | 2100 | 2150 | 2200 | 2250 | 2300 | 2350 | 2400 | 2450 | 2500 | 2550 | 2600 | 2650 | 2700 | 2750 | 2800 | 2850 | 2900 | 2950 | 3000 | 3050 |
|---|---|---|---|---|---|---|---|---|---|---|---|---|---|---|---|---|---|---|---|---|---|---|---|---|---|---|---|---|---|---|
| L | 1969 | 2019 | 2069 | 2119 | 2169 | 2219 | 2269 | 2319 | 2369 | 2419 | 2469 | 2519 | 2569 | 2619 | 2669 | 2719 | 2769 | 2819 | 2869 | 2919 | 2969 | 3019 | 3069 | 3119 | 3169 | 3219 | 3269 | 3319 | 3369 | 3419 |
| A | 200 | 50 | 100 | 150 | 200 | 50 | 100 | 150 | 200 | 50 | 100 | 150 | 200 | 50 | 100 | 150 | 200 | 50 | 100 | 150 | 200 | 50 | 100 | 150 | 200 | 50 | 100 | 150 | 200 | 50 |
| M | 8 | 9 | 9 | 9 | 9 | 10 | 10 | 10 | 10 | 11 | 11 | 11 | 11 | 12 | 12 | 12 | 12 | 13 | 13 | 13 | 13 | 14 | 14 | 14 | 14 | 15 | 15 | 15 | 15 | 16 |
| N | 20 | 22 | 22 | 22 | 22 | 24 | 24 | 24 | 24 | 26 | 26 | 26 | 26 | 28 | 28 | 28 | 28 | 30 | 30 | 30 | 30 | 32 | 32 | 32 | 32 | 34 | 34 | 34 | 34 | 36 |
| KG | 36.6 | 37.4 | 38.2 | 39 | 39.8 | 40.6 | 41.4 | 42.2 | 43 | 43.8 | 44.6 | 45.4 | 46.2 | 47 | 47.8 | 48.6 | 49.4 | 50.2 | 51 | 51.8 | 52.6 | 53.4 | 54.2 | 55 | 55.8 | 56.6 | 57.4 | 58.2 | 59 | 59.8 |

### RD Motor on Lower Right Side

2D CAD 3D CAD • CAD Download : www.gmtlinear.com •

(Unit:mm)

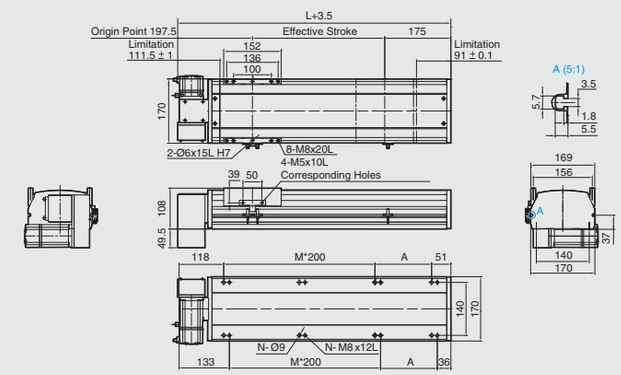


| Stroke | 100 | 150 | 200 | 250 | 300 | 350 | 400 | 450 | 500 | 550 | 600 | 650 | 700 | 750 | 800 | 850 | 900 | 950 | 1000 | 1050 | 1100 | 1150 | 1200 | 1250 | 1300 | 1350 | 1400 | 1450 | 1500 | 1550 |
|---|---|---|---|---|---|---|---|---|---|---|---|---|---|---|---|---|---|---|---|---|---|---|---|---|---|---|---|---|---|---|
| L | 469 | 519 | 569 | 619 | 669 | 719 | 769 | 819 | 869 | 919 | 969 | 1019 | 1069 | 1119 | 1169 | 1219 | 1269 | 1319 | 1369 | 1419 | 1469 | 1519 | 1569 | 1619 | 1669 | 1719 | 1769 | 1819 | 1869 | 1919 |
| A | 100 | 150 | 200 | 50 | 100 | 150 | 200 | 50 | 100 | 150 | 200 | 50 | 100 | 150 | 200 | 50 | 100 | 150 | 200 | 50 | 100 | 150 | 200 | 50 | 100 | 150 | 200 | 50 | 100 | 150 |
| M | 1 | 1 | 1 | 2 | 2 | 2 | 2 | 3 | 3 | 3 | 3 | 4 | 4 | 4 | 4 | 5 | 5 | 5 | 5 | 6 | 6 | 6 | 6 | 7 | 7 | 7 | 7 | 8 | 8 | 8 |
| N | 6 | 6 | 6 | 8 | 8 | 8 | 8 | 10 | 10 | 10 | 10 | 12 | 12 | 12 | 12 | 14 | 14 | 14 | 14 | 16 | 16 | 16 | 16 | 18 | 18 | 18 | 18 | 20 | 20 | 20 |
| KG | 12 | 13.8 | 14.6 | 15.4 | 16.1 | 16.9 | 17.7 | 18.5 | 19.2 | 20 | 20.8 | 21.6 | 22.3 | 23.1 | 23.9 | 24.7 | 25.4 | 26.2 | 27 | 27.8 | 28.6 | 29.4 | 30.2 | 31 | 31.8 | 32.6 | 33.4 | 34.2 | 35 | 35.8 |

| Stroke | 1600 | 1650 | 1700 | 1750 | 1800 | 1850 | 1900 | 1950 | 2000 | 2050 | 2100 | 2150 | 2200 | 2250 | 2300 | 2350 | 2400 | 2450 | 2500 | 2550 | 2600 | 2650 | 2700 | 2750 | 2800 | 2850 | 2900 | 2950 | 3000 | 3050 |
|---|---|---|---|---|---|---|---|---|---|---|---|---|---|---|---|---|---|---|---|---|---|---|---|---|---|---|---|---|---|---|
| L | 1969 | 2019 | 2069 | 2119 | 2169 | 2219 | 2269 | 2319 | 2369 | 2419 | 2469 | 2519 | 2569 | 2619 | 2669 | 2719 | 2769 | 2819 | 2869 | 2919 | 2969 | 3019 | 3069 | 3119 | 3169 | 3219 | 3269 | 3319 | 3369 | 3419 |
| A | 200 | 50 | 100 | 150 | 200 | 50 | 100 | 150 | 200 | 50 | 100 | 150 | 200 | 50 | 100 | 150 | 200 | 50 | 100 | 150 | 200 | 50 | 100 | 150 | 200 | 50 | 100 | 150 | 200 | 50 |
| M | 8 | 9 | 9 | 9 | 9 | 10 | 10 | 10 | 10 | 11 | 11 | 11 | 11 | 12 | 12 | 12 | 12 | 13 | 13 | 13 | 13 | 14 | 14 | 14 | 14 | 15 | 15 | 15 | 15 | 16 |
| N | 20 | 22 | 22 | 22 | 22 | 24 | 24 | 24 | 24 | 26 | 26 | 26 | 26 | 28 | 28 | 28 | 28 | 30 | 30 | 30 | 30 | 32 | 32 | 32 | 32 | 34 | 34 | 34 | 34 | 36 |
| KG | 36.6 | 37.4 | 38.2 | 39 | 39.8 | 40.6 | 41.4 | 42.2 | 43 | 43.8 | 44.6 | 45.4 | 46.2 | 47 | 47.8 | 48.6 | 49.4 | 50.2 | 51 | 51.8 | 52.6 | 53.4 | 54.2 | 55 | 55.8 | 56.6 | 57.4 | 58.2 | 59 | 59.8 |

# GETB17M
## Single Axis
## Motor on Upper Left Side / Motor on Upper Right Side

### LU Motor on Upper Left Side

2D CAD 3D CAD • CAD Download : www.gmtlinear.com •

(Unit:mm)

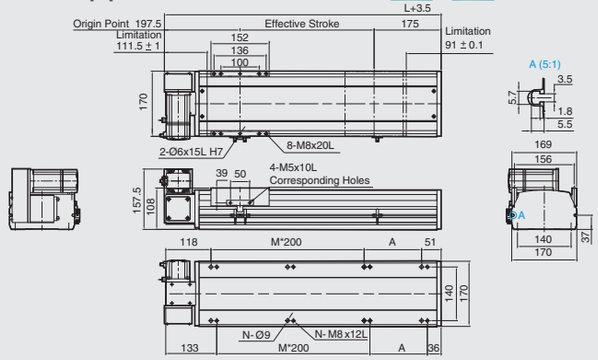


| Stroke | 100 | 150 | 200 | 250 | 300 | 350 | 400 | 450 | 500 | 550 | 600 | 650 | 700 | 750 | 800 | 850 | 900 | 950 | 1000 | 1050 | 1100 | 1150 | 1200 | 1250 | 1300 | 1350 | 1400 | 1450 | 1500 | 1550 |
|---|---|---|---|---|---|---|---|---|---|---|---|---|---|---|---|---|---|---|---|---|---|---|---|---|---|---|---|---|---|---|
| L | 469 | 519 | 569 | 619 | 669 | 719 | 769 | 819 | 869 | 919 | 969 | 1019 | 1069 | 1119 | 1169 | 1219 | 1269 | 1319 | 1369 | 1419 | 1469 | 1519 | 1569 | 1619 | 1669 | 1719 | 1769 | 1819 | 1869 | 1919 |
| A | 100 | 150 | 200 | 50 | 100 | 150 | 200 | 50 | 100 | 150 | 200 | 50 | 100 | 150 | 200 | 50 | 100 | 150 | 200 | 50 | 100 | 150 | 200 | 50 | 100 | 150 | 200 | 50 | 100 | 150 |
| M | 1 | 1 | 1 | 2 | 2 | 2 | 2 | 3 | 3 | 3 | 3 | 4 | 4 | 4 | 4 | 5 | 5 | 5 | 5 | 6 | 6 | 6 | 6 | 7 | 7 | 7 | 7 | 8 | 8 | 8 |
| N | 6 | 6 | 6 | 8 | 8 | 8 | 8 | 10 | 10 | 10 | 10 | 12 | 12 | 12 | 12 | 14 | 14 | 14 | 14 | 16 | 16 | 16 | 16 | 18 | 18 | 18 | 18 | 20 | 20 | 20 |
| KG | 12 | 13.8 | 14.6 | 15.4 | 16.1 | 16.9 | 17.7 | 18.5 | 19.2 | 20 | 20.8 | 21.6 | 22.3 | 23.1 | 23.9 | 24.7 | 25.4 | 26.2 | 27 | 27.8 | 28.6 | 29.4 | 30.2 | 31 | 31.8 | 32.6 | 33.4 | 34.2 | 35 | 35.8 |

| Stroke | 1600 | 1650 | 1700 | 1750 | 1800 | 1850 | 1900 | 1950 | 2000 | 2050 | 2100 | 2150 | 2200 | 2250 | 2300 | 2350 | 2400 | 2450 | 2500 | 2550 | 2600 | 2650 | 2700 | 2750 | 2800 | 2850 | 2900 | 2950 | 3000 | 3050 |
|---|---|---|---|---|---|---|---|---|---|---|---|---|---|---|---|---|---|---|---|---|---|---|---|---|---|---|---|---|---|---|
| L | 1969 | 2019 | 2069 | 2119 | 2169 | 2219 | 2269 | 2319 | 2369 | 2419 | 2469 | 2519 | 2569 | 2619 | 2669 | 2719 | 2769 | 2819 | 2869 | 2919 | 2969 | 3019 | 3069 | 3119 | 3169 | 3219 | 3269 | 3319 | 3369 | 3419 |
| A | 200 | 50 | 100 | 150 | 200 | 50 | 100 | 150 | 200 | 50 | 100 | 150 | 200 | 50 | 100 | 150 | 200 | 50 | 100 | 150 | 200 | 50 | 100 | 150 | 200 | 50 | 100 | 150 | 200 | 50 |
| M | 8 | 9 | 9 | 9 | 9 | 10 | 10 | 10 | 10 | 11 | 11 | 11 | 11 | 12 | 12 | 12 | 12 | 13 | 13 | 13 | 13 | 14 | 14 | 14 | 14 | 15 | 15 | 15 | 15 | 16 |
| N | 20 | 22 | 22 | 22 | 22 | 24 | 24 | 24 | 24 | 26 | 26 | 26 | 26 | 28 | 28 | 28 | 28 | 30 | 30 | 30 | 30 | 32 | 32 | 32 | 32 | 34 | 34 | 34 | 34 | 36 |
| KG | 36.6 | 37.4 | 38.2 | 39 | 39.8 | 40.6 | 41.4 | 42.2 | 43 | 43.8 | 44.6 | 45.4 | 46.2 | 47 | 47.8 | 48.6 | 49.4 | 50.2 | 51 | 51.8 | 52.6 | 53.4 | 54.2 | 55 | 55.8 | 56.6 | 57.4 | 58.2 | 59 | 59.8 |

### RU Motor on Upper Right Side

2D CAD 3D CAD • CAD Download : www.gmtlinear.com •

(Unit:mm)

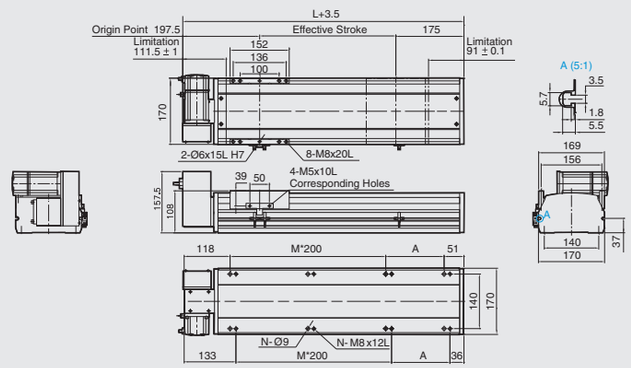


| Stroke | 100 | 150 | 200 | 250 | 300 | 350 | 400 | 450 | 500 | 550 | 600 | 650 | 700 | 750 | 800 | 850 | 900 | 950 | 1000 | 1050 | 1100 | 1150 | 1200 | 1250 | 1300 | 1350 | 1400 | 1450 | 1500 | 1550 |
|---|---|---|---|---|---|---|---|---|---|---|---|---|---|---|---|---|---|---|---|---|---|---|---|---|---|---|---|---|---|---|
| L | 469 | 519 | 569 | 619 | 669 | 719 | 769 | 819 | 869 | 919 | 969 | 1019 | 1069 | 1119 | 1169 | 1219 | 1269 | 1319 | 1369 | 1419 | 1469 | 1519 | 1569 | 1619 | 1669 | 1719 | 1769 | 1819 | 1869 | 1919 |
| A | 100 | 150 | 200 | 50 | 100 | 150 | 200 | 50 | 100 | 150 | 200 | 50 | 100 | 150 | 200 | 50 | 100 | 150 | 200 | 50 | 100 | 150 | 200 | 50 | 100 | 150 | 200 | 50 | 100 | 150 |
| M | 1 | 1 | 1 | 2 | 2 | 2 | 2 | 3 | 3 | 3 | 3 | 4 | 4 | 4 | 4 | 5 | 5 | 5 | 5 | 6 | 6 | 6 | 6 | 7 | 7 | 7 | 7 | 8 | 8 | 8 |
| N | 6 | 6 | 6 | 8 | 8 | 8 | 8 | 10 | 10 | 10 | 10 | 12 | 12 | 12 | 12 | 14 | 14 | 14 | 14 | 16 | 16 | 16 | 16 | 18 | 18 | 18 | 18 | 20 | 20 | 20 |
| KG | 12 | 13.8 | 14.6 | 15.4 | 16.1 | 16.9 | 17.7 | 18.5 | 19.2 | 20 | 20.8 | 21.6 | 22.3 | 23.1 | 23.9 | 24.7 | 25.4 | 26.2 | 27 | 27.8 | 28.6 | 29.4 | 30.2 | 31 | 31.8 | 32.6 | 33.4 | 34.2 | 35 | 35.8 |

| Stroke | 1600 | 1650 | 1700 | 1750 | 1800 | 1850 | 1900 | 1950 | 2000 | 2050 | 2100 | 2150 | 2200 | 2250 | 2300 | 2350 | 2400 | 2450 | 2500 | 2550 | 2600 | 2650 | 2700 | 2750 | 2800 | 2850 | 2900 | 2950 | 3000 | 3050 |
|---|---|---|---|---|---|---|---|---|---|---|---|---|---|---|---|---|---|---|---|---|---|---|---|---|---|---|---|---|---|---|
| L | 1969 | 2019 | 2069 | 2119 | 2169 | 2219 | 2269 | 2319 | 2369 | 2419 | 2469 | 2519 | 2569 | 2619 | 2669 | 2719 | 2769 | 2819 | 2869 | 2919 | 2969 | 3019 | 3069 | 3119 | 3169 | 3219 | 3269 | 3319 | 3369 | 3419 |
| A | 200 | 50 | 100 | 150 | 200 | 50 | 100 | 150 | 200 | 50 | 100 | 150 | 200 | 50 | 100 | 150 | 200 | 50 | 100 | 150 | 200 | 50 | 100 | 150 | 200 | 50 | 100 | 150 | 200 | 50 |
| M | 8 | 9 | 9 | 9 | 9 | 10 | 10 | 10 | 10 | 11 | 11 | 11 | 11 | 12 | 12 | 12 | 12 | 13 | 13 | 13 | 13 | 14 | 14 | 14 | 14 | 15 | 15 | 15 | 15 | 16 |
| N | 20 | 22 | 22 | 22 | 22 | 24 | 24 | 24 | 24 | 26 | 26 | 26 | 26 | 28 | 28 | 28 | 28 | 30 | 30 | 30 | 30 | 32 | 32 | 32 | 32 | 34 | 34 | 34 | 34 | 36 |
| KG | 36.6 | 37.4 | 38.2 | 39 | 39.8 | 40.6 | 41.4 | 42.2 | 43 | 43.8 | 44.6 | 45.4 | 46.2 | 47 | 47.8 | 48.6 | 49.4 | 50.2 | 51 | 51.8 | 52.6 | 53.4 | 54.2 | 55 | 55.8 | 56.6 | 57.4 | 58.2 | 59 | 59.8 |

# GETB22M
## Single Axis
## Belt Driven



Maximum Stroke 4050 mm | Maximum Speed 2000 mm/s | Motor Output 750W | Belt Width 50 mm | Linear Guide 23X18-2 Pc

## Ordering Method

GETB22M - L 40 - 100 - L - M 75 - C 4 - 0001

Model | Belt Type | Lead | Stroke | Motor Position | Motor Brand | Home Sensor | Limit Sensor | Special Order No.

**Belt Type**

| | |
|---|---|
| L | PU Belt |
| X | Rubber Belt |

**Stroke**

| |
|---|
| 100-4050 mm |
| 50 Pitch |

**Motor Position**

| | |
|---|---|
| L | Motor on Left Side |
| LU | Motor on Upper Left Side |
| LD | Motor on Lower Left Side |
| R | Motor on Right Side |
| RU | Motor on Upper Right Side |
| RD | Motor on Lower Right Side |

**Motor Brand**

| | | | |
|---|---|---|---|
| M | Mitsubishi | 10 | - |
| P | Panasonic | 20 | - |
| Y | Yaskawa | 40 | - |
| T | Delta | 75 | 750W |

**Home Sensor**

| | |
|---|---|
| External | |
| C | Motor Side |
| D | Opposite Motor Side |
| Without Sensor | |
| E | Without Sensor |

**Limit Sensor**

| | |
|---|---|
| External | |
| 3 | 1 Pc |
| 4 | 2 Pc |
| Without Sensor | |
| 5 | Without Sensor |



Motorized X-Axis ▶ Belt Driven ▶ Linear Drive
GETB22M
GMT GLOBAL INC.
GETB Specifications Introduction

## Specifications

| | | | |
|---|---|---|---|
| Performance | Repeatability (mm) | | ±0.04 |
| | Belt Lead (mm) | | 40 |
| | Maximum Speed (mm / s) | | 2000 |
| | Maximum Load | Horizontal (kg) | 85 |
| | | Vertical (kg) | |
| | Rated Thrust (N) | | 367 |
| | Stroke / Pitch (mm) | | 100-4050 mm / 50 mm Pitch |
| Parts | AC Servo Motor Output (W) | | 750 |
| | Belt Width (mm) | | 50 |
| | High Rigidity Linear Guide (mm) | | 23X18 |
| | Home Sensor | External | EE-SX672 (NPN) |

## Sensor Circuit Diagram

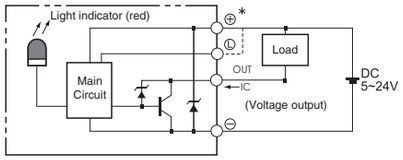


## Allowable Overhang (N.m)

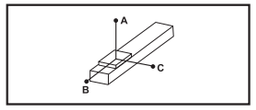


(Unit:mm)

| Horizontal Installation | A | B | C |
|---|---|---|---|
| 45kg | 3444 | 1015 | 1358 |
| 65kg | 2460 | 725 | 970 |
| 85kg | 1892 | 558 | 746 |

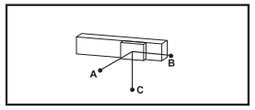


(Unit:mm)

| Wall Installation | A | B | C |
|---|---|---|---|
| 45kg | 1414 | 928 | 3437 |
| 65kg | 1010 | 663 | 2455 |
| 85kg | 777 | 510 | 1888 |

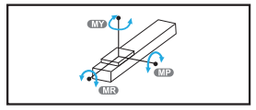


(Unit:N.m)

| Static Loading Moment | |
|---|---|
| MY | 2052 |
| MP | 2052 |
| MR | 1810 |

## Servo Motor Options

| Brand | Mark | Brake | Motor Output | AC-Voltage | Motor Model | Driver Model |
|---|---|---|---|---|---|---|
| Mitsubishi | M | Without Brake (Horizontal Type) | 750 | 220 | HF-KP73 | MR-J3-70A |
| Panasonic | P | Without Brake (Horizontal Type) | 750 | 220 | MHMD082P1S | MCDDT3520 |
| Delta | T | Without Brake (Horizontal Type) | 750 | 220 | ECMA-C20807ES | ASD-B20721-B |

# GETB22M
## Single Axis
## Motor on Left Side / Motor on Right Side

### L Motor on Left Side

2D CAD 3D CAD • CAD Download : www.gmtlinear.com •

(Unit:mm)

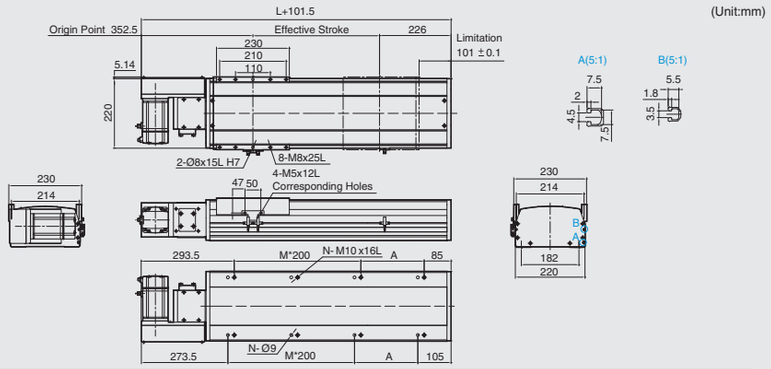


| Stroke | 100 | 150 | 200 | 250 | 300 | 350 | 400 | 450 | 500 | 550 | 600 | 650 | 700 | 750 | 800 | 850 | 900 | 950 | 1000 | 1050 | 1100 | 1150 | 1200 | 1250 | 1300 | 1350 | 1400 | 1450 | 1500 | 1550 |
|---|---|---|---|---|---|---|---|---|---|---|---|---|---|---|---|---|---|---|---|---|---|---|---|---|---|---|---|---|---|---|
| L | 577 | 627 | 677 | 727 | 777 | 827 | 877 | 927 | 977 | 1027 | 1077 | 1127 | 1177 | 1227 | 1277 | 1327 | 1377 | 1427 | 1477 | 1527 | 1577 | 1627 | 1677 | 1727 | 1777 | 1827 | 1877 | 1927 | 1977 | 2027 |
| A | 100 | 150 | 200 | 50 | 100 | 150 | 200 | 50 | 100 | 150 | 200 | 50 | 100 | 150 | 200 | 50 | 100 | 150 | 200 | 50 | 100 | 150 | 200 | 50 | 100 | 150 | 200 | 50 | 100 | 150 |
| M | 1 | 1 | 1 | 2 | 2 | 2 | 2 | 3 | 3 | 3 | 3 | 4 | 4 | 4 | 4 | 5 | 5 | 5 | 5 | 6 | 6 | 6 | 6 | 7 | 7 | 7 | 7 | 8 | 8 | 8 |
| N | 6 | 6 | 6 | 8 | 8 | 8 | 8 | 10 | 10 | 10 | 10 | 12 | 12 | 12 | 12 | 14 | 14 | 14 | 14 | 16 | 16 | 16 | 16 | 18 | 18 | 18 | 18 | 20 | 20 | 20 |
| KG | 30 | 31.2 | 32.4 | 33.6 | 34.8 | 36 | 37.2 | 38.4 | 39.6 | 40.8 | 42 | 43.2 | 44.4 | 45.6 | 46.8 | 48 | 49.2 | 50.4 | 51.6 | 52.8 | 54 | 55.2 | 56.4 | 57.6 | 58.8 | 60 | 61.2 | 62.4 | 63.6 | 64.8 |

| Stroke | 1600 | 1650 | 1700 | 1750 | 1800 | 1850 | 1900 | 1950 | 2000 | 2050 | 2100 | 2150 | 2200 | 2250 | 2300 | 2350 | 2400 | 2450 | 2500 | 2550 | 2600 | 2650 | 2700 | 2750 | 2800 | 2850 | 2900 | 2950 | 3000 | 3050 |
|---|---|---|---|---|---|---|---|---|---|---|---|---|---|---|---|---|---|---|---|---|---|---|---|---|---|---|---|---|---|---|
| L | 2077 | 2127 | 2177 | 2227 | 2277 | 2327 | 2377 | 2427 | 2477 | 2527 | 2577 | 2627 | 2677 | 2727 | 2777 | 2827 | 2877 | 2927 | 2977 | 3027 | 3077 | 3127 | 3177 | 3227 | 3277 | 3327 | 3377 | 3427 | 3477 | 3527 |
| A | 200 | 50 | 100 | 150 | 200 | 50 | 100 | 150 | 200 | 50 | 100 | 150 | 200 | 50 | 100 | 150 | 200 | 50 | 100 | 150 | 200 | 50 | 100 | 150 | 200 | 50 | 100 | 150 | 200 | 50 |
| M | 8 | 9 | 9 | 9 | 9 | 10 | 10 | 10 | 10 | 11 | 11 | 11 | 11 | 12 | 12 | 12 | 12 | 13 | 13 | 13 | 13 | 14 | 14 | 14 | 14 | 15 | 15 | 15 | 15 | 16 |
| N | 20 | 22 | 22 | 22 | 22 | 24 | 24 | 24 | 24 | 26 | 26 | 26 | 26 | 28 | 28 | 28 | 28 | 30 | 30 | 30 | 30 | 32 | 32 | 32 | 32 | 34 | 34 | 34 | 34 | 36 |
| KG | 66 | 67.2 | 68.4 | 69.6 | 70.8 | 72 | 73.2 | 74.4 | 75.6 | 76.8 | 78 | 79.2 | 80.4 | 81.6 | 82.8 | 84 | 85.2 | 86.4 | 87.6 | 88.8 | 90 | 91.2 | 92.4 | 93.6 | 94.8 | 96 | 97.2 | 98.4 | 99.6 | 100.8 |

### R Motor on Right Side

2D CAD 3D CAD • CAD Download : www.gmtlinear.com •

(Unit:mm)

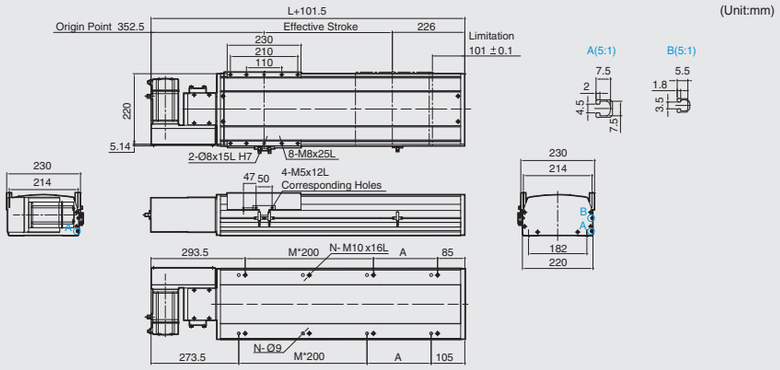


| Stroke | 100 | 150 | 200 | 250 | 300 | 350 | 400 | 450 | 500 | 550 | 600 | 650 | 700 | 750 | 800 | 850 | 900 | 950 | 1000 | 1050 | 1100 | 1150 | 1200 | 1250 | 1300 | 1350 | 1400 | 1450 | 1500 | 1550 |
|---|---|---|---|---|---|---|---|---|---|---|---|---|---|---|---|---|---|---|---|---|---|---|---|---|---|---|---|---|---|---|
| L | 577 | 627 | 677 | 727 | 777 | 827 | 877 | 927 | 977 | 1027 | 1077 | 1127 | 1177 | 1227 | 1277 | 1327 | 1377 | 1427 | 1477 | 1527 | 1577 | 1627 | 1677 | 1727 | 1777 | 1827 | 1877 | 1927 | 1977 | 2027 |
| A | 100 | 150 | 200 | 50 | 100 | 150 | 200 | 50 | 100 | 150 | 200 | 50 | 100 | 150 | 200 | 50 | 100 | 150 | 200 | 50 | 100 | 150 | 200 | 50 | 100 | 150 | 200 | 50 | 100 | 150 |
| M | 1 | 1 | 1 | 2 | 2 | 2 | 2 | 3 | 3 | 3 | 3 | 4 | 4 | 4 | 4 | 5 | 5 | 5 | 5 | 6 | 6 | 6 | 6 | 7 | 7 | 7 | 7 | 8 | 8 | 8 |
| N | 6 | 6 | 6 | 8 | 8 | 8 | 8 | 10 | 10 | 10 | 10 | 12 | 12 | 12 | 12 | 14 | 14 | 14 | 14 | 16 | 16 | 16 | 16 | 18 | 18 | 18 | 18 | 20 | 20 | 20 |
| KG | 30 | 31.2 | 32.4 | 33.6 | 34.8 | 36 | 37.2 | 38.4 | 39.6 | 40.8 | 42 | 43.2 | 44.4 | 45.6 | 46.8 | 48 | 49.2 | 50.4 | 51.6 | 52.8 | 54 | 55.2 | 56.4 | 57.6 | 58.8 | 60 | 61.2 | 62.4 | 63.6 | 64.8 |

| Stroke | 1600 | 1650 | 1700 | 1750 | 1800 | 1850 | 1900 | 1950 | 2000 | 2050 | 2100 | 2150 | 2200 | 2250 | 2300 | 2350 | 2400 | 2450 | 2500 | 2550 | 2600 | 2650 | 2700 | 2750 | 2800 | 2850 | 2900 | 2950 | 3000 | 3050 |
|---|---|---|---|---|---|---|---|---|---|---|---|---|---|---|---|---|---|---|---|---|---|---|---|---|---|---|---|---|---|---|
| L | 2077 | 2127 | 2177 | 2227 | 2277 | 2327 | 2377 | 2427 | 2477 | 2527 | 2577 | 2627 | 2677 | 2727 | 2777 | 2827 | 2877 | 2927 | 2977 | 3027 | 3077 | 3127 | 3177 | 3227 | 3277 | 3327 | 3377 | 3427 | 3477 | 3527 |
| A | 200 | 50 | 100 | 150 | 200 | 50 | 100 | 150 | 200 | 50 | 100 | 150 | 200 | 50 | 100 | 150 | 200 | 50 | 100 | 150 | 200 | 50 | 100 | 150 | 200 | 50 | 100 | 150 | 200 | 50 |
| M | 8 | 9 | 9 | 9 | 9 | 10 | 10 | 10 | 10 | 11 | 11 | 11 | 11 | 12 | 12 | 12 | 12 | 13 | 13 | 13 | 13 | 14 | 14 | 14 | 14 | 15 | 15 | 15 | 15 | 16 |
| N | 20 | 22 | 22 | 22 | 22 | 24 | 24 | 24 | 24 | 26 | 26 | 26 | 26 | 28 | 28 | 28 | 28 | 30 | 30 | 30 | 30 | 32 | 32 | 32 | 32 | 34 | 34 | 34 | 34 | 36 |
| KG | 66 | 67.2 | 68.4 | 69.6 | 70.8 | 72 | 73.2 | 74.4 | 75.6 | 76.8 | 78 | 79.2 | 80.4 | 81.6 | 82.8 | 84 | 85.2 | 86.4 | 87.6 | 88.8 | 90 | 91.2 | 92.4 | 93.6 | 94.8 | 96 | 97.2 | 98.4 | 99.6 | 100.8 |





# GETB17M
## Single Axis
## Motor on Lower Left Side / Motor on Lower Right Side

### LD Motor on Lower Left Side

2D CAD 3D CAD • CAD Download : www.gmtlinear.com •

(Unit:mm)

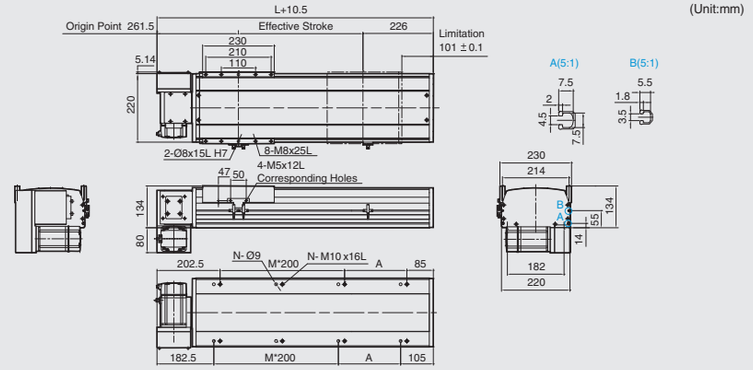


| Stroke | 100 | 150 | 200 | 250 | 300 | 350 | 400 | 450 | 500 | 550 | 600 | 650 | 700 | 750 | 800 | 850 | 900 | 950 | 1000 | 1050 | 1100 | 1150 | 1200 | 1250 | 1300 | 1350 | 1400 | 1450 | 1500 | 1550 |
|---|---|---|---|---|---|---|---|---|---|---|---|---|---|---|---|---|---|---|---|---|---|---|---|---|---|---|---|---|---|---|
| L | 577 | 627 | 677 | 727 | 777 | 827 | 877 | 927 | 977 | 1027 | 1077 | 1127 | 1177 | 1227 | 1277 | 1327 | 1377 | 1427 | 1477 | 1527 | 1577 | 1627 | 1677 | 1727 | 1777 | 1827 | 1877 | 1927 | 1977 | 2027 |
| A | 100 | 150 | 200 | 50 | 100 | 150 | 200 | 50 | 100 | 150 | 200 | 50 | 100 | 150 | 200 | 50 | 100 | 150 | 200 | 50 | 100 | 150 | 200 | 50 | 100 | 150 | 200 | 50 | 100 | 150 |
| M | 1 | 1 | 1 | 2 | 2 | 2 | 2 | 3 | 3 | 3 | 3 | 4 | 4 | 4 | 4 | 5 | 5 | 5 | 5 | 6 | 6 | 6 | 6 | 7 | 7 | 7 | 7 | 8 | 8 | 8 |
| N | 6 | 6 | 6 | 8 | 8 | 8 | 8 | 10 | 10 | 10 | 10 | 12 | 12 | 12 | 12 | 14 | 14 | 14 | 14 | 16 | 16 | 16 | 16 | 18 | 18 | 18 | 18 | 20 | 20 | 20 |
| KG | 30 | 31.2 | 32.4 | 33.6 | 34.8 | 36 | 37.2 | 38.4 | 39.6 | 40.8 | 42 | 43.2 | 44.4 | 45.6 | 46.8 | 48 | 49.2 | 50.4 | 51.6 | 52.8 | 54 | 55.2 | 56.4 | 57.6 | 58.8 | 60 | 61.2 | 62.4 | 63.6 | 64.8 |

| Stroke | 1600 | 1650 | 1700 | 1750 | 1800 | 1850 | 1900 | 1950 | 2000 | 2050 | 2100 | 2150 | 2200 | 2250 | 2300 | 2350 | 2400 | 2450 | 2500 | 2550 | 2600 | 2650 | 2700 | 2750 | 2800 | 2850 | 2900 | 2950 | 3000 | 3050 |
|---|---|---|---|---|---|---|---|---|---|---|---|---|---|---|---|---|---|---|---|---|---|---|---|---|---|---|---|---|---|---|
| L | 2077 | 2127 | 2177 | 2227 | 2277 | 2327 | 2377 | 2427 | 2477 | 2527 | 2577 | 2627 | 2677 | 2727 | 2777 | 2827 | 2877 | 2927 | 2977 | 3027 | 3077 | 3127 | 3177 | 3227 | 3277 | 3327 | 3377 | 3427 | 3477 | 3527 |
| A | 200 | 50 | 100 | 150 | 200 | 50 | 100 | 150 | 200 | 50 | 100 | 150 | 200 | 50 | 100 | 150 | 200 | 50 | 100 | 150 | 200 | 50 | 100 | 150 | 200 | 50 | 100 | 150 | 200 | 50 |
| M | 8 | 9 | 9 | 9 | 9 | 10 | 10 | 10 | 10 | 11 | 11 | 11 | 11 | 12 | 12 | 12 | 12 | 13 | 13 | 13 | 13 | 14 | 14 | 14 | 14 | 15 | 15 | 15 | 15 | 16 |
| N | 20 | 22 | 22 | 22 | 22 | 24 | 24 | 24 | 24 | 26 | 26 | 26 | 26 | 28 | 28 | 28 | 28 | 30 | 30 | 30 | 30 | 32 | 32 | 32 | 32 | 34 | 34 | 34 | 34 | 36 |
| KG | 66 | 67.2 | 68.4 | 69.6 | 70.8 | 72 | 73.2 | 74.4 | 75.6 | 76.8 | 78 | 79.2 | 80.4 | 81.6 | 82.8 | 84 | 85.2 | 86.4 | 87.6 | 88.8 | 90 | 91.2 | 92.4 | 93.6 | 94.8 | 96 | 97.2 | 98.4 | 99.6 | 100.8 |

### RD Motor on Lower Right Side

2D CAD 3D CAD • CAD Download : www.gmtlinear.com •

(Unit:mm)

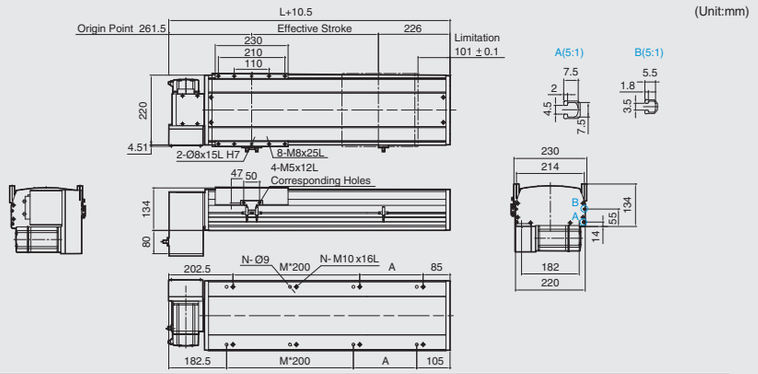


| Stroke | 100 | 150 | 200 | 250 | 300 | 350 | 400 | 450 | 500 | 550 | 600 | 650 | 700 | 750 | 800 | 850 | 900 | 950 | 1000 | 1050 | 1100 | 1150 | 1200 | 1250 | 1300 | 1350 | 1400 | 1450 | 1500 | 1550 |
|---|---|---|---|---|---|---|---|---|---|---|---|---|---|---|---|---|---|---|---|---|---|---|---|---|---|---|---|---|---|---|
| L | 577 | 627 | 677 | 727 | 777 | 827 | 877 | 927 | 977 | 1027 | 1077 | 1127 | 1177 | 1227 | 1277 | 1327 | 1377 | 1427 | 1477 | 1527 | 1577 | 1627 | 1677 | 1727 | 1777 | 1827 | 1877 | 1927 | 1977 | 2027 |
| A | 100 | 150 | 200 | 50 | 100 | 150 | 200 | 50 | 100 | 150 | 200 | 50 | 100 | 150 | 200 | 50 | 100 | 150 | 200 | 50 | 100 | 150 | 200 | 50 | 100 | 150 | 200 | 50 | 100 | 150 |
| M | 1 | 1 | 1 | 2 | 2 | 2 | 2 | 3 | 3 | 3 | 3 | 4 | 4 | 4 | 4 | 5 | 5 | 5 | 5 | 6 | 6 | 6 | 6 | 7 | 7 | 7 | 7 | 8 | 8 | 8 |
| N | 6 | 6 | 6 | 8 | 8 | 8 | 8 | 10 | 10 | 10 | 10 | 12 | 12 | 12 | 12 | 14 | 14 | 14 | 14 | 16 | 16 | 16 | 16 | 18 | 18 | 18 | 18 | 20 | 20 | 20 |
| KG | 30 | 31.2 | 32.4 | 33.6 | 34.8 | 36 | 37.2 | 38.4 | 39.6 | 40.8 | 42 | 43.2 | 44.4 | 45.6 | 46.8 | 48 | 49.2 | 50.4 | 51.6 | 52.8 | 54 | 55.2 | 56.4 | 57.6 | 58.8 | 60 | 61.2 | 62.4 | 63.6 | 64.8 |

| Stroke | 1600 | 1650 | 1700 | 1750 | 1800 | 1850 | 1900 | 1950 | 2000 | 2050 | 2100 | 2150 | 2200 | 2250 | 2300 | 2350 | 2400 | 2450 | 2500 | 2550 | 2600 | 2650 | 2700 | 2750 | 2800 | 2850 | 2900 | 2950 | 3000 | 3050 |
|---|---|---|---|---|---|---|---|---|---|---|---|---|---|---|---|---|---|---|---|---|---|---|---|---|---|---|---|---|---|---|
| L | 2077 | 2127 | 2177 | 2227 | 2277 | 2327 | 2377 | 2427 | 2477 | 2527 | 2577 | 2627 | 2677 | 2727 | 2777 | 2827 | 2877 | 2927 | 2977 | 3027 | 3077 | 3127 | 3177 | 3227 | 3277 | 3327 | 3377 | 3427 | 3477 | 3527 |
| A | 200 | 50 | 100 | 150 | 200 | 50 | 100 | 150 | 200 | 50 | 100 | 150 | 200 | 50 | 100 | 150 | 200 | 50 | 100 | 150 | 200 | 50 | 100 | 150 | 200 | 50 | 100 | 150 | 200 | 50 |
| M | 8 | 9 | 9 | 9 | 9 | 10 | 10 | 10 | 10 | 11 | 11 | 11 | 11 | 12 | 12 | 12 | 12 | 13 | 13 | 13 | 13 | 14 | 14 | 14 | 14 | 15 | 15 | 15 | 15 | 16 |
| N | 20 | 22 | 22 | 22 | 22 | 24 | 24 | 24 | 24 | 26 | 26 | 26 | 26 | 28 | 28 | 28 | 28 | 30 | 30 | 30 | 30 | 32 | 32 | 32 | 32 | 34 | 34 | 34 | 34 | 36 |
| KG | 66 | 67.2 | 68.4 | 69.6 | 70.8 | 72 | 73.2 | 74.4 | 75.6 | 76.8 | 78 | 79.2 | 80.4 | 81.6 | 82.8 | 84 | 85.2 | 86.4 | 87.6 | 88.8 | 90 | 91.2 | 92.4 | 93.6 | 94.8 | 96 | 97.2 | 98.4 | 99.6 | 100.8 |

# GETB22M
## Single Axis
## Motor on Upper Left Side / Motor on Upper Right Side

### LU Motor on Upper Left Side

2D CAD 3D CAD

• CAD Download : www.gmtlinear.com •

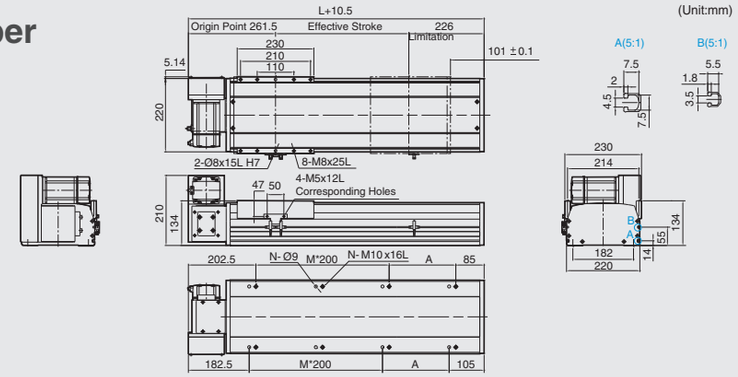


| Stroke | 100 | 150 | 200 | 250 | 300 | 350 | 400 | 450 | 500 | 550 | 600 | 650 | 700 | 750 | 800 | 850 | 900 | 950 | 1000 | 1050 | 1100 | 1150 | 1200 | 1250 | 1300 | 1350 | 1400 | 1450 | 1500 | 1550 |
|---|---|---|---|---|---|---|---|---|---|---|---|---|---|---|---|---|---|---|---|---|---|---|---|---|---|---|---|---|---|---|
| L | 577 | 627 | 677 | 727 | 777 | 827 | 877 | 927 | 977 | 1027 | 1077 | 1127 | 1177 | 1227 | 1277 | 1327 | 1377 | 1427 | 1477 | 1527 | 1577 | 1627 | 1677 | 1727 | 1777 | 1827 | 1877 | 1927 | 1977 | 2027 |
| A | 100 | 150 | 200 | 50 | 100 | 150 | 200 | 50 | 100 | 150 | 200 | 50 | 100 | 150 | 200 | 50 | 100 | 150 | 200 | 50 | 100 | 150 | 200 | 50 | 100 | 150 | 200 | 50 | 100 | 150 |
| M | 1 | 1 | 1 | 2 | 2 | 2 | 2 | 3 | 3 | 3 | 3 | 4 | 4 | 4 | 4 | 5 | 5 | 5 | 5 | 6 | 6 | 6 | 6 | 7 | 7 | 7 | 7 | 8 | 8 | 8 |
| N | 6 | 6 | 6 | 8 | 8 | 8 | 8 | 10 | 10 | 10 | 10 | 12 | 12 | 12 | 12 | 14 | 14 | 14 | 14 | 16 | 16 | 16 | 16 | 18 | 18 | 18 | 18 | 20 | 20 | 20 |
| KG | 30 | 31.2 | 32.4 | 33.6 | 34.8 | 36 | 37.2 | 38.4 | 39.6 | 40.8 | 42 | 43.2 | 44.4 | 45.6 | 46.8 | 48 | 49.2 | 50.4 | 51.6 | 52.8 | 54 | 55.2 | 56.4 | 57.6 | 58.8 | 60 | 61.2 | 62.4 | 63.6 | 64.8 |

| Stroke | 1600 | 1650 | 1700 | 1750 | 1800 | 1850 | 1900 | 1950 | 2000 | 2050 | 2100 | 2150 | 2200 | 2250 | 2300 | 2350 | 2400 | 2450 | 2500 | 2550 | 2600 | 2650 | 2700 | 2750 | 2800 | 2850 | 2900 | 2950 | 3000 | 3050 |
|---|---|---|---|---|---|---|---|---|---|---|---|---|---|---|---|---|---|---|---|---|---|---|---|---|---|---|---|---|---|---|
| L | 2077 | 2127 | 2177 | 2227 | 2277 | 2327 | 2377 | 2427 | 2477 | 2527 | 2577 | 2627 | 2677 | 2727 | 2777 | 2827 | 2877 | 2927 | 2977 | 3027 | 3077 | 3127 | 3177 | 3227 | 3277 | 3327 | 3377 | 3427 | 3477 | 3527 |
| A | 200 | 50 | 100 | 150 | 200 | 50 | 100 | 150 | 200 | 50 | 100 | 150 | 200 | 50 | 100 | 150 | 200 | 50 | 100 | 150 | 200 | 50 | 100 | 150 | 200 | 50 | 100 | 150 | 200 | 50 |
| M | 8 | 9 | 9 | 9 | 9 | 10 | 10 | 10 | 10 | 11 | 11 | 11 | 11 | 12 | 12 | 12 | 12 | 13 | 13 | 13 | 13 | 14 | 14 | 14 | 14 | 15 | 15 | 15 | 15 | 16 |
| N | 20 | 22 | 22 | 22 | 22 | 24 | 24 | 24 | 24 | 26 | 26 | 26 | 26 | 28 | 28 | 28 | 28 | 30 | 30 | 30 | 30 | 32 | 32 | 32 | 32 | 34 | 34 | 34 | 34 | 36 |
| KG | 66 | 67.2 | 68.4 | 69.6 | 70.8 | 72 | 73.2 | 74.4 | 75.6 | 76.8 | 78 | 79.2 | 80.4 | 81.6 | 82.8 | 84 | 85.2 | 86.4 | 87.6 | 88.8 | 90 | 91.2 | 92.4 | 93.6 | 94.8 | 96 | 97.2 | 98.4 | 99.6 | 100.8 |

### RU Motor on Upper Right Side

2D CAD 3D CAD

• CAD Download : www.gmtlinear.com •

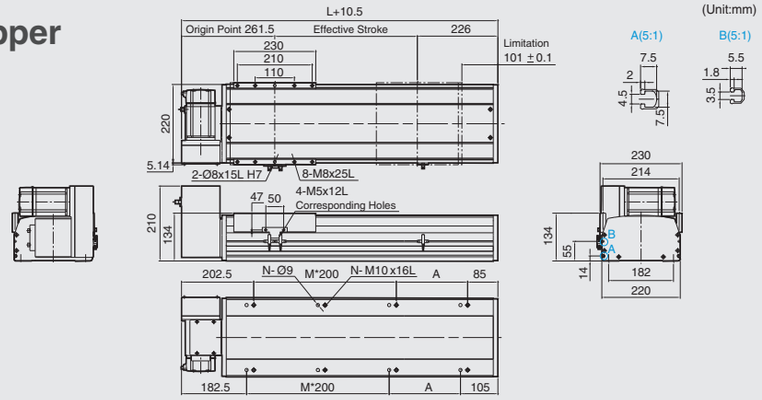


| Stroke | 100 | 150 | 200 | 250 | 300 | 350 | 400 | 450 | 500 | 550 | 600 | 650 | 700 | 750 | 800 | 850 | 900 | 950 | 1000 | 1050 | 1100 | 1150 | 1200 | 1250 | 1300 | 1350 | 1400 | 1450 | 1500 | 1550 |
|---|---|---|---|---|---|---|---|---|---|---|---|---|---|---|---|---|---|---|---|---|---|---|---|---|---|---|---|---|---|---|
| L | 577 | 627 | 677 | 727 | 777 | 827 | 877 | 927 | 977 | 1027 | 1077 | 1127 | 1177 | 1227 | 1277 | 1327 | 1377 | 1427 | 1477 | 1527 | 1577 | 1627 | 1677 | 1727 | 1777 | 1827 | 1877 | 1927 | 1977 | 2027 |
| A | 100 | 150 | 200 | 50 | 100 | 150 | 200 | 50 | 100 | 150 | 200 | 50 | 100 | 150 | 200 | 50 | 100 | 150 | 200 | 50 | 100 | 150 | 200 | 50 | 100 | 150 | 200 | 50 | 100 | 150 |
| M | 1 | 1 | 1 | 2 | 2 | 2 | 2 | 3 | 3 | 3 | 3 | 4 | 4 | 4 | 4 | 5 | 5 | 5 | 5 | 6 | 6 | 6 | 6 | 7 | 7 | 7 | 7 | 8 | 8 | 8 |
| N | 6 | 6 | 6 | 8 | 8 | 8 | 8 | 10 | 10 | 10 | 10 | 12 | 12 | 12 | 12 | 14 | 14 | 14 | 14 | 16 | 16 | 16 | 16 | 18 | 18 | 18 | 18 | 20 | 20 | 20 |
| KG | 30 | 31.2 | 32.4 | 33.6 | 34.8 | 36 | 37.2 | 38.4 | 39.6 | 40.8 | 42 | 43.2 | 44.4 | 45.6 | 46.8 | 48 | 49.2 | 50.4 | 51.6 | 52.8 | 54 | 55.2 | 56.4 | 57.6 | 58.8 | 60 | 61.2 | 62.4 | 63.6 | 64.8 |

| Stroke | 1600 | 1650 | 1700 | 1750 | 1800 | 1850 | 1900 | 1950 | 2000 | 2050 | 2100 | 2150 | 2200 | 2250 | 2300 | 2350 | 2400 | 2450 | 2500 | 2550 | 2600 | 2650 | 2700 | 2750 | 2800 | 2850 | 2900 | 2950 | 3000 | 3050 |
|---|---|---|---|---|---|---|---|---|---|---|---|---|---|---|---|---|---|---|---|---|---|---|---|---|---|---|---|---|---|---|
| L | 2077 | 2127 | 2177 | 2227 | 2277 | 2327 | 2377 | 2427 | 2477 | 2527 | 2577 | 2627 | 2677 | 2727 | 2777 | 2827 | 2877 | 2927 | 2977 | 3027 | 3077 | 3127 | 3177 | 3227 | 3277 | 3327 | 3377 | 3427 | 3477 | 3527 |
| A | 200 | 50 | 100 | 150 | 200 | 50 | 100 | 150 | 200 | 50 | 100 | 150 | 200 | 50 | 100 | 150 | 200 | 50 | 100 | 150 | 200 | 50 | 100 | 150 | 200 | 50 | 100 | 150 | 200 | 50 |
| M | 8 | 9 | 9 | 9 | 9 | 10 | 10 | 10 | 10 | 11 | 11 | 11 | 11 | 12 | 12 | 12 | 12 | 13 | 13 | 13 | 13 | 14 | 14 | 14 | 14 | 15 | 15 | 15 | 15 | 16 |
| N | 20 | 22 | 22 | 22 | 22 | 24 | 24 | 24 | 24 | 26 | 26 | 26 | 26 | 28 | 28 | 28 | 28 | 30 | 30 | 30 | 30 | 32 | 32 | 32 | 32 | 34 | 34 | 34 | 34 | 36 |
| KG | 66 | 67.2 | 68.4 | 69.6 | 70.8 | 72 | 73.2 | 74.4 | 75.6 | 76.8 | 78 | 79.2 | 80.4 | 81.6 | 82.8 | 84 | 85.2 | 86.4 | 87.6 | 88.8 | 90 | 91.2 | 92.4 | 93.6 | 94.8 | 96 | 97.2 | 98.4 | 99.6 | 100.8 |

## 1.Parallelism / Height Inspection

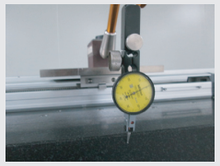
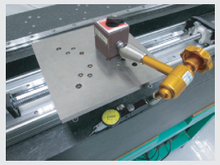

### Measuring Tools
Dial Gauge , Dial Indicator

### Measuring Methods
1.Fix the actuator on granite.
2.Fix the measuring tools on the actuator's slider.
3.As photo display.
4.Record it with video and keep it in file for reference.

## 2.Dynamic Accuracy Inspection

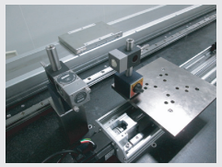
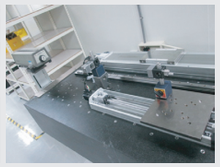

### Measuring Tools
Laser Interferometer

### Measuring Methods
1.Fix the actuator on granite.
2.Fix the measuring tools on the actuator's slider.
3.As photo display.
4.Record it with video and keep it in file for reference.

## 3.Repeatability Accuracy Inspection

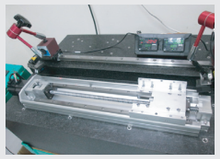


### Measuring Tools
Kenyence Laser Sensor

### Measuring Methods
1.Fix the actuator on granite.
2.Use laser to align the slider's side to the detect the repeatability accuracy.
3.As photo display.
4.Record it with video and keep it in file for reference.

## 4.Power Drive Inspection by Checking Motor Current



### Measuring Tools
Mitsubishi Servo Driver　100W, 200W, 400W

### Measuring Methods
1.Fix the actuator on granite.
2.Fix the measuring tools on the actuator's slider.
3.As photo display.
4.Record it with video and keep it in file for reference.

## 5.Sliding Smoothness Inspection

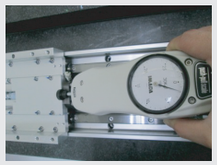

### Measuring Tools
Push Pull Scale

### Measuring Methods
1.Fix the actuator on granite.
2.Push the slider with push pull scale.
3.As photo display.
4.Record it with video and keep it in file for reference.





## 6.Belt Tension Inspection



### Measuring Tools
CLAVIS Belt Tension Meters

### Measuring Methods
1.Fix the actuator on granite.
2.Use CLAVIS Belt Tension Meters to measure the natural frequency of vibration of a belt span.
3.As photo display.
4.Record the value on delivery inspection report.

## 7.Decibel Inspection

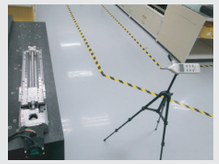

### Measuring Tools
Decibel Meter

### Measuring Methods
1.Fix the actuator on granite.
2.Distance between decibel meter and measuring item is 300mm.
3.Driving in high speed.
4.As photo display.
5.Record the value on delivery inspection report.

## 8.Measuring Granite Platform

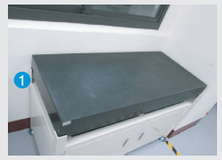


### Dimention
1. Size：1295mm*600mm*140mm
2. Size：4020mm*800mm*300mm

## 9.Material Inspection

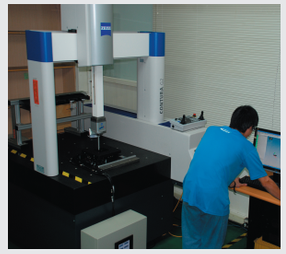



### Measuring Tools
1.ZEISS Coordinate Measuring Machine.
2.Electronic vernier caliper, vernier caliper.
3.Inside micrometer, outside micrometer.
4.Altimeter, vertical meter.
5.Electronic level meter.
6.Dial Gauge, Dial Indicator.
7.Steel tape, Steel ruler.

### Measuring Tools Calibration Standards
Block gauge, ring gauge (regularly qualified)
QC Room :
1.Control temperature and humidity to keep the stability of the measurement.
2.Measuring tools calibrated regularly.

## Flatness and Straightness Standard

Flatness Standard = The parallelism of body basis is less than ±0.05mm/M
Straightness Standard = The parallelism of slider basis and straight line basis is less than ±0.05mm/M

Flatness Testing Method

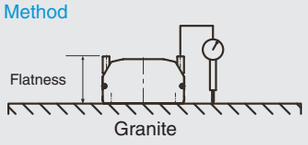


Straightness Testing Method

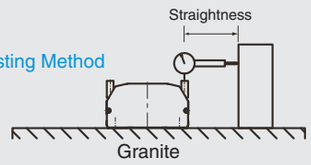


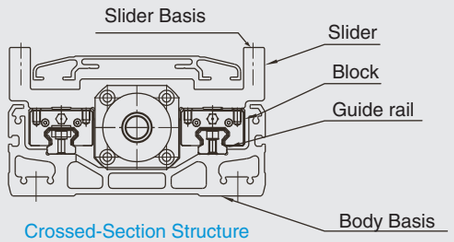


Crossed-Section Structure

## Equation of Moment of Inertia Calculation

Usually the load is not a simple form, and the calculation of the moment of inertia is not easy. As a method, the load is replaced with several factors that resemble a simple form for which the moment of inertia can be calculated.
The total of the moment of inertia for these factors is then obtained.
The objects and equations of ten used for the calculation of the moment inertia are shown below.

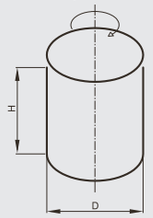


1.Moment of inertia for cylinder :
The moment of inertia (J) for a cylinder having a rotation center such as shown below is given by

$$J = \frac{P\pi D^4 h}{32\times 980} = \frac{WD^2}{8g}(kgf\cdot cm\cdot sec^2)$$
$$= \frac{mD^2}{8}(Kgm^2)$$

P = Density (kg/cm²)
g = Gravitational acceleration (cm/sec²)
W = Weight of cylinder (kgf)
m = Mass of cylinder (kg)

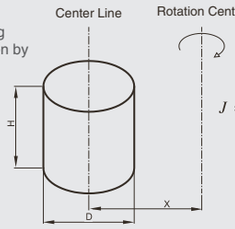


3.When the object's center line is offset from the rotation center :
The moment of inertia (J) for a cylinder having a rotation center such as shown below is given by

$$J = \frac{P\pi D^4 h}{32} + \frac{P\pi D^4 h}{4} = \frac{WD^2}{8g} + \frac{WX^2}{G}(kgf\cdot cm\cdot sec^2)$$
$$= \frac{mD^2}{8} + mX^2(Kgm^2)$$

P = Density (kg/cm²)
g = Gravitational acceleration (cm/sec²)
W=Weight of cylinder (kgf)
m=Mass of cylinder (kg)

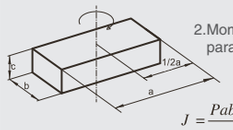


2.Moment of inertia for rectangular parallelepiped :

$$J = \frac{Pabc(a^2+b^2)}{12} = \frac{W(a^2+b^2)}{12g}(kgf\cdot cm\cdot sec^2)$$
$$= \frac{M(a^2+b^2)}{12}(Kgm^2)$$

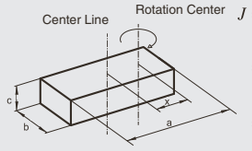


$$J = \frac{Pabc(a^2+b^2)}{12} + \frac{PabcX^2}{G}$$
$$= \frac{W(a^2+b^2)}{12g} + \frac{WX^2}{G}(kgf\cdot cm\cdot sec^2)$$
$$= \frac{M(a^2+b^2)}{12} + mX^2(Kgm^2)$$

P = Density (kg/cm²)
g = Gravitational acceleration (cm/sec²)
W = Weight of cylinder (kgf)
m = Mass of cylinder (kg)

W = Weight of prism (kgf)
M = Mass of prism (kg)





## Overhang Load Length

An overhang load length is specified for a slider-type actuator to indicate the length of overhang (offset) from the actuator. When the length of an object mounted to the slider actuator exceeds this length, it will generate vibration and increase the setting time. So, pay attention to the allowable overhang length as well as the allowable dynamic moment.

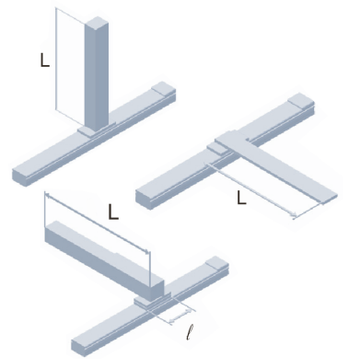


### The allowable overhang load length is determined by the slider length.

An overhang that exceeds the allowable overhang length will generate vibration and increase settling time.

L/ℓ =5 or less

* Between 3 to 4 for a camera-equipped measuring machine.

For example :
Mechanical Machine
Measuring Machine
Robot

## Allowable Dynamic Moment

The allowable dynamic moment is the maximum offset load exerted on the slider, calculated from the guide service life. The direction in which force is exerted on the guide is categorized into 3 directions - MP (pitch), MY (yaw), MR (roll) - the tolerance for each of which are set for each actuator. Applying a moment exceeding the allowable value will reduce the service life of the actuator. Use an auxiliary guide when working within or in excess of these tolerances.

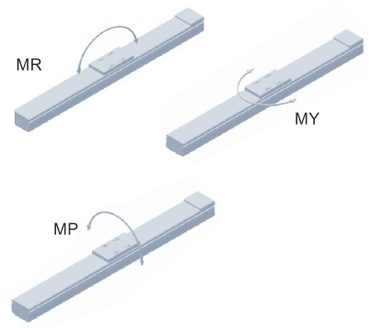


### The allowable dynamic moment is calculated from the service life of the guide.

Over the moment would reduce the life of actuator.

*Moment is based on the following basis

**M(N·m)=W(kg)XL(m)X9·8**

W:Load
L:Distance from work point to the center of gravity of payload.

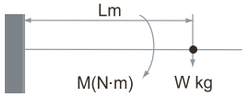

## Lead Accuracy

Precision ground ball screws are controlled in accordance with JIS B 1192.
The permissible values and each part of definitions are shown below.

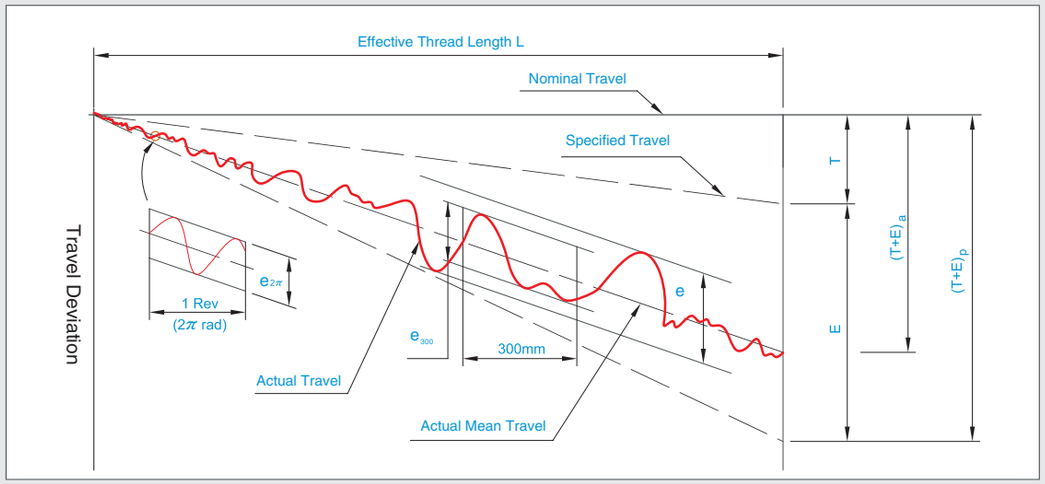


Diagram 1. Lead Measuring Curve

● Table 1 Terms

| | | |
|---|---|---|
| **T + E** | Actual Mean Travel | Actual mean travel is the straight line which gives the minimum straightness deviation determined by laser instrument for the actual travel. |
| **P** | | Permissible value. |
| **a** | | Actual value. |
| **T** | Specified Travel<br>The Target Value | This value is determined by customer and maker as it depends on different application requirement. |
| **E** | Actual Mean<br>Travel Deviation | Actual mean travel deviation is the difference between actual mean travel and deviation specified, and the allowance can be a plus or a minus. |
| **e** | Travel Variation | The maximum band width of the travel deviation parallel to the actual mean travel for a specified travel interval. |
| **$e_{300}$** | | A length of 300mm which is randomly taken within the effective threaded portion of the screw shaft. |
| **$e_{2\pi}$** | | One arbitrary revolution (2π rad) within the effective threaded portion of screw shaft. |



Motorized X-Axis ▶ Ball Screw&Belt Driven ▶ Linear Drive
Accuracy Definition
GMT GLOBAL INC.
Reference

● Actual mean travel deviation (±E) and travel variation (e)

Effective Thread Length (mm)

| GRADE | | C0 | | C1 | | C2 | | C3 | | C4 | | C5 | | C6 | C7 | C8 |
|---|---|---|---|---|---|---|---|---|---|---|---|---|---|---|---|---|
| OVER | UP TO | E | e | E | e | E | e | E | e | E | e | E | e | ±0.025 / 300mm | ±0.050 / 300mm | ±0.120 300mm |
| | 315 | 4 | 3.5 | 6 | 5 | 5 | 7 | 12 | 8 | 12 | 12 | 23 | 18 | | | |
| 315 | 400 | 5 | 3.5 | 7 | 5 | 7 | 7 | 13 | 10 | 14 | 12 | 25 | 20 | | | |
| 400 | 500 | 6 | 4 | 8 | 5 | 8 | 7 | 15 | 10 | 16 | 12 | 27 | 20 | | | |
| 500 | 630 | 6 | 4 | 9 | 6 | 9 | 7 | 16 | 12 | 18 | 14 | 30 | 23 | | | |
| 630 | 800 | 7 | 5 | 10 | 7 | 10 | 7 | 18 | 13 | 20 | 14 | 35 | 25 | | | |
| 800 | 1000 | 8 | 6 | 11 | 8 | 11 | 8 | 21 | 15 | 22 | 16 | 40 | 27 | | | |
| 1000 | 1250 | 9 | 6 | 13 | 9 | 13 | 9 | 24 | 16 | 25 | 18 | 46 | 30 | | | |
| 1250 | 1600 | 11 | 7 | 15 | 10 | 15 | 10 | 29 | 18 | 29 | 20 | 54 | 35 | | | |
| 1600 | 2000 | | | 18 | 11 | 18 | 11 | 35 | 21 | 35 | 22 | 65 | 40 | | | |
| 2000 | 2500 | | | 22 | 12 | 21 | 13 | 41 | 24 | 41 | 25 | 77 | 46 | | | |
| 2500 | 3150 | | | 26 | 15 | 25 | 15 | 50 | 29 | 50 | 29 | 93 | 54 | | | |
| 3150 | 4000 | | | 32 | 18 | 30 | 18 | 62 | 35 | 62 | 35 | 115 | 65 | | | |
| 4000 | 5000 | | | | | 36 | 21 | 76 | 41 | 76 | 41 | 140 | 77 | | | |
| 5000 | 6300 | | | | | | | 85 | 50 | 85 | 50 | 170 | 96 | | | |
| 6300 | 8000 | | | | | | | 106 | 62 | 106 | 62 | 213 | 115 | | | |
| 8000 | | | | | | | | | | 132 | 75 | 265 | 140 | | | |

● Accuracy grade

Variation in random 300mm ($e_{300}$) and wobble ($e_{2\pi}$)

$\alpha_{522}$ Unit:μm

| GRADE | C0 | C1 | C2 | C3 | C4 | C5 | C6 | C7 | C10 |
|---|---|---|---|---|---|---|---|---|---|
| JIS | 3.5 | 5 | | 8 | | 18 | | 50 | 210 |
| PMI | 3.5 | 5 | 7 | 8 | 12 | 18 | 25 | 50 | 210 |

$\alpha_{4\pi}$ Unit:μm

| GRADE | C0 | C1 | C2 | C3 | C4 | C5 |
|---|---|---|---|---|---|---|
| JIS | 3 | 4 | | 6 | | 8 |
| PMI | 3 | 4 | 4 | 6 | 8 | 8 |

## Mitsubishi Servo Motor Specifications

| Servo Motor | Without Brake | HF-KP13 | HF-KP23 | HF-KP43 | HF-KP73 |
|---|---|---|---|---|---|
| | With Brake | HF-KP13B | HF-KP23B | HF-KP43B | HF-KP73B |
| Motor Driver | | MR-J3-10A | MR-J3-20A | MR-J3-40A | MR-J3-70A |
| Power Supply Capacity (KAV) | | 0.3 | 0.5 | 0.9 | 1.3 |
| Power Consumption (W) | | 100 | 200 | 400 | 750 |
| Rated Torque (N·m) | | 0.32 | 0.64 | 1.3 | 2.4 |
| Instantaneous Maximum Torque (N·m) | | 0.95 | 1.9 | 3.8 | 7.2 |
| Rated Current (Arms) | | 0.8 | 1.4 | 2.7 | 5.2 |
| Maximum Current(Arms) | | 2.4 | 4.2 | 8.1 | 15.6 |
| Rated Speed (r / min) | | 3000 | | | |
| Maximum Speed (r / min) | | 6000 | | | |
| Load Inertia ($X10^{-4}kg·m^2$) | Without Brake | 0.088 | 0.24 | 0.42 | 1.43 |
| | With Brake | 0.09 | 0.31 | 0.5 | 1.63 |
| Load Inertia Moment Ratio | | Under 15 Multiple | Under 24 Multiple | Under 22 Multiple | Under 15 Multiple |
| Controller | Type | Incremental, Share With 18 Bit Controller | | | |
| | Encoder Resolution of Servo Motor | 262144 p/rev | | | |
| Structure | | Natural-cooling, Open (IP Rating:IP65) | | | |
| Environmental Conditions | Temperature | 0°C~40°C(Non-freezing) , -15°C~70°C(Non-freezing) | | | |
| | Humidity | 80%RH Non-freezing , 90%RHRH Non-condensing | | | |
| | Applicable Occasion | Indoors(no direct sunlight), Free From Corrosive Gases, Flammable Gases, Oil Mist, Dust, And Dirt | | | |
| | Applicable Height | Max. 1000m Above Sea Level | | | |
| | Vibration | 49m/s2 | | | |
| Weight (kg) | Without Brake | 0.56 | 0.94 | 1.5 | 2.9 |
| | With Brake | 0.86 | 1.6 | 2.1 | 3.9 |

### 100W

| Model | 100W | L |
|---|---|---|
| HF-KP13 | Without Brake | 82.4 |
| HF-KP13B | With Brake | 123.5 |

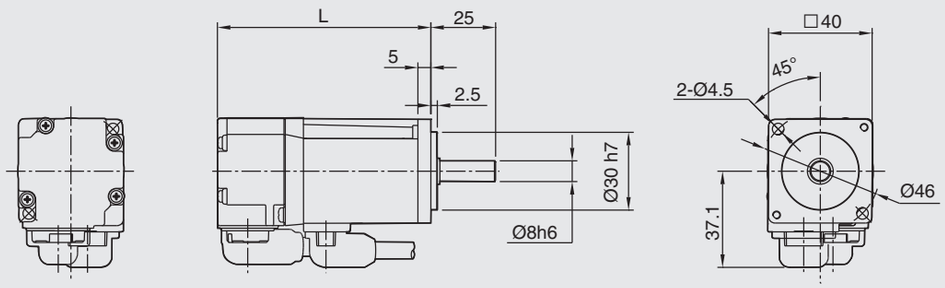


### 200W

| Model | 200W | L |
|---|---|---|
| HF-KP23 | Without Brake | 76.6 |
| HF-KP23B | With Brake | 116.1 |

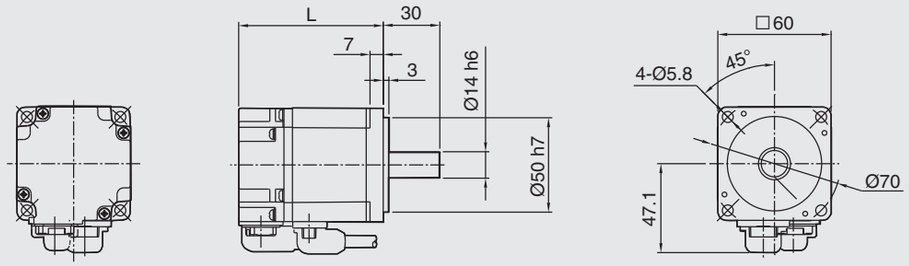


### 400W

| Model | 400W | L |
|---|---|---|
| HF-KP43 | Without Brake | 98.5 |
| HF-KP43B | With Brake | 138 |

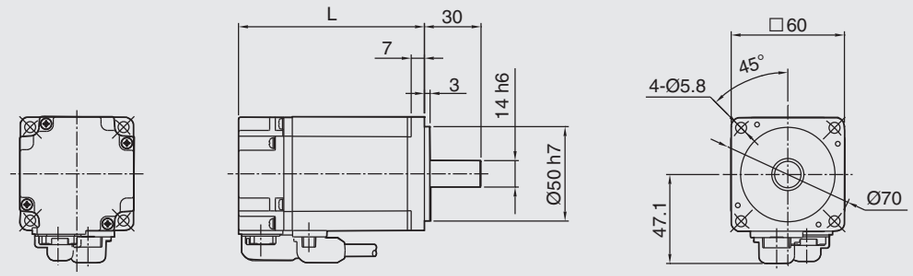


### 750W

| Model | 750W | L |
|---|---|---|
| HF-KP73 | Without Brake | 113.8 |
| HF-KP73B | With Brake | 157 |

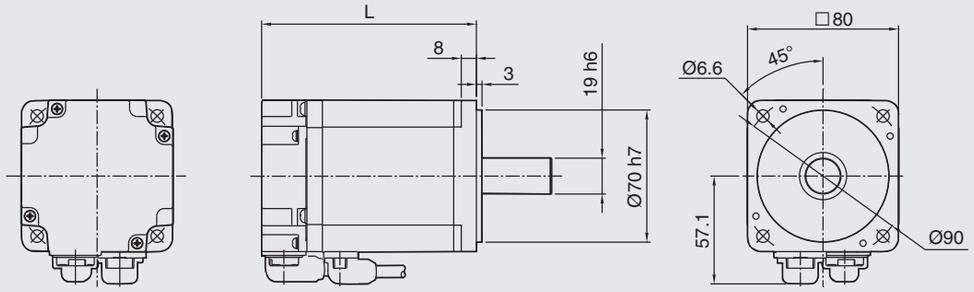

## Panasonic Servo Motor Specifications

| Servo Motor | | Without Brake | MSMD012P1S | MHMD022P1S | MHMD042P1S | MHMD082P1S |
|---|---|---|---|---|---|---|
| | | With Brake | MSMD012P1T | MHMD022P1T | MHMD042P1T | MHMD082P1T |
| Motor Driver | | | MADDT1205 | MADDT1207 | MBDDT2210 | MCDDT3520 |
| Power Supply Capacity (KAV) | | | 0.3 | 0.5 | 0.9 | 1.3 |
| Power Consumption (W) | | | 100 | 200 | 400 | 750 |
| Rated Torque (N·m) | | | 0.32 | 0.64 | 1.3 | 2.4 |
| Instantaneous Maximum Torque (N·m) | | | 0.95 | 1.91 | 3.8 | 7.1 |
| Rated Current (Arms) | | | 1.1 | 1.6 | 2.6 | 4 |
| Maximum Current (Arms) | | | 4.7 | 6.9 | 11 | 17 |
| Rated Speed (r / min) | | | 3000 | | | |
| Maximum Speed (r / min) | | | 4500 | 5000 | | 4500 |
| Load Inertia ($X10^{-4}kg·m^2$) | | Without Brake | 0.051 | 0.42 | 0.67 | 1.51 |
| | | With Brake | 0.054 | 0.45 | 0.7 | 1.61 |
| Load Inertia Moment Ratio | | | Under 30 Multiple | | | Under 20 Multiple |
| Controller | | Pulse | Incremental 2500p/r | | | |
| | | Resolution | 10000 | | | |
| Structure | | | Natural-cooling , Open (IP rating:IP65) | | | |
| Environmental Conditions | | Temperature | 0°C~40°C(Non-freezing) , -20°C~80°C(Non-freezing) | | | |
| | | Humidity | 85%RH Non-freezing | | | |
| | | Applicable Occasion | Indoors(no direct sunlight), Free From Corrosive Gases, Flammable Gases, Oil Mist, Dust, And Dirt | | | |
| | | Applicable Height | Max. 1000m Above Sea Level | | | |
| | | Vibration | 49m/s2 | | | |
| Weight (kg) | | Without Brake | 0.47 | 0.96 | 1.4 | 2.5 |
| | | With Brake | 0.68 | 1.4 | 1.8 | 3.3 |

### 100W

| Model | 100W | L |
|---|---|---|
| MSMD012P1S | Without Brake | 92 |
| MSMD012P1T | With Brake | 122 |

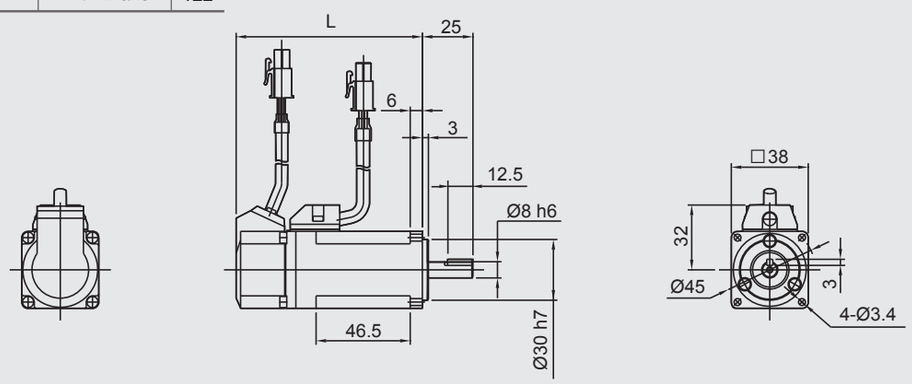


### 200W

| Model | 200W | L |
|---|---|---|
| MHMD022P1S | Without Brake | 98.5 |
| MHMD022P1T | With Brake | 135 |

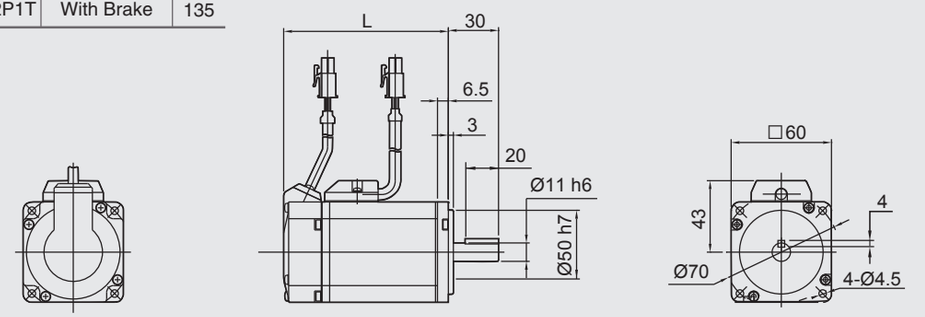


### 400W

| Model | 400W | L |
|---|---|---|
| MHMD042P1S | Without Brake | 118 |
| MHMD042P1T | With Brake | 154.5 |

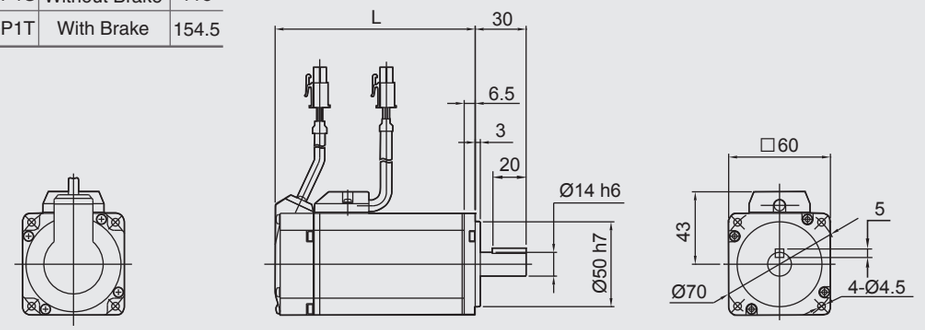


### 750W

| Model | 750W | L |
|---|---|---|
| MHMD082P1S | Without Brake | 127 |
| MHMD082P1T | With Brake | 164 |

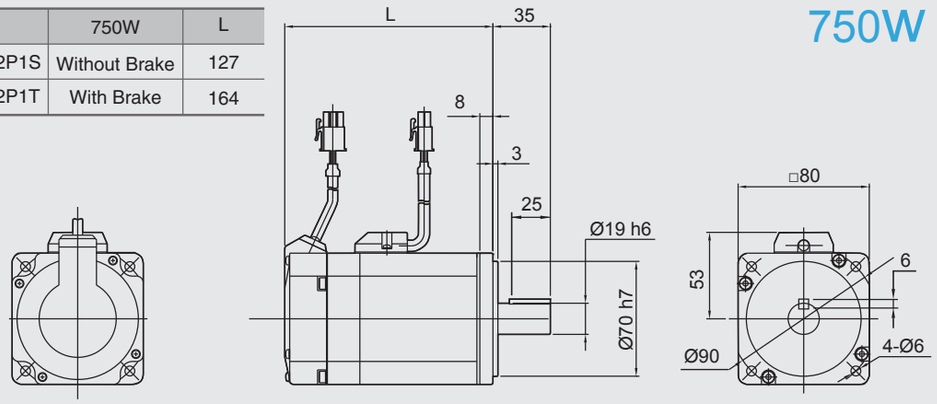

## Delta Servo Motor Specifications

| Servo Motor | | Without Brake | ECMA-C20401ES | ECMA-C20602ES | ECMA-C20604ES | ECMA-C20807ES |
|---|---|---|---|---|---|---|
| | | With Brake | ECMA-C20401FS | ECMA-C20602FS | ECMA-C20604FS | ECMA-C20807FS |
| Motor Driver | | | ASD-B20121-B | ASD-B20221-B | ASD-B20421-B | ASD-B20721-B |
| Power Consumption (W) | | | 100 | 200 | 400 | 750 |
| Rated Torque (N·m) | | | 0.32 | 0.64 | 1.27 | 2.39 |
| Instantaneous Maximum Torque (N·m) | | | 0.96 | 1.92 | 3.82 | 7.16 |
| Rated Current (Arms) | | | 0.9 | 1.55 | 2.6 | 5.1 |
| Maximum Current (Arms) | | | 2.7 | 4.65 | 7.8 | 15.3 |
| Rated Speed (r / min) | | | 3000 | | | |
| Maximum Speed (r / min) | | | 5000 | | | |
| Load Inertia ($X10^{-4}kg·m^2$) | | Without Brake | 0.037 E-4 | 0.177 E-4 | 0.277 E-4 | 1.13 E-4 |
| | | With Brake | 0.04 E-4 | 0.19 E-4 | 0.30 E-4 | 1.18 E-4 |
| Controller | Type | | Incremental, Share With 17 Bit Controller | | | |
| | Encoder Resolution of Servo Motor | | 131072 p/rev | | | |
| Structure | | | IP65 | | | |
| Environmental Conditions | Temperature | | 0°C~40°C(Non-freezing) , -10°C~80°C(Non-freezing) | | | |
| | Humidity | | 20-90%RH Non-freezing | | | |
| | Applicable Occasion | | Indoors(no direct sunlight), Free From Corrosive Gases, Flammable Gases, Oil Mist, Dust, And Dirt | | | |
| | Applicable Height | | Max. 1000m Above Sea Level | | | |
| | Vibration | | Below 20Hz 9.80665m/s2(1G) | | | |
| Weight (kg) | Without Brake | | 0.5 | 1.2 | 1.6 | 3 |
| | With Brake | | 0.8 | 1.5 | 2 | 3.8 |

| Model | 100W | L |
|---|---|---|
| ECMA-C20401ES | Without Brake | 100.6 |
| ECMA-C20401FS | With Brake | 136.6 |

### 100W

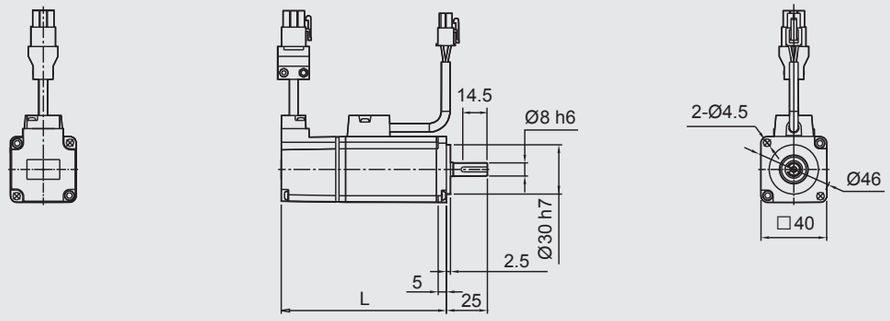


| Model | 200W | L |
|---|---|---|
| ECMA-C20602ES | Without Brake | 105.5 |
| ECMA-C20602FS | With Brake | 141.6 |

### 200W

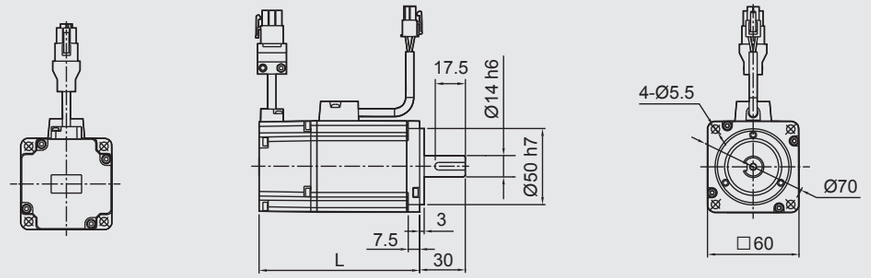


| Model | 400W | L |
|---|---|---|
| ECMA-C20604ES | Without Brake | 130.7 |
| ECMA-C20604FS | With Brake | 166.8 |

### 400W

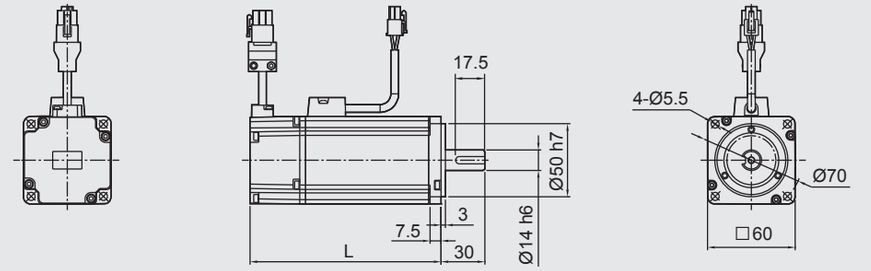


| Model | 100W | L |
|---|---|---|
| ECMA-C20807ES | Without Brake | 138.3 |
| ECMA-C20807FS | With Brake | 178 |

### 750W

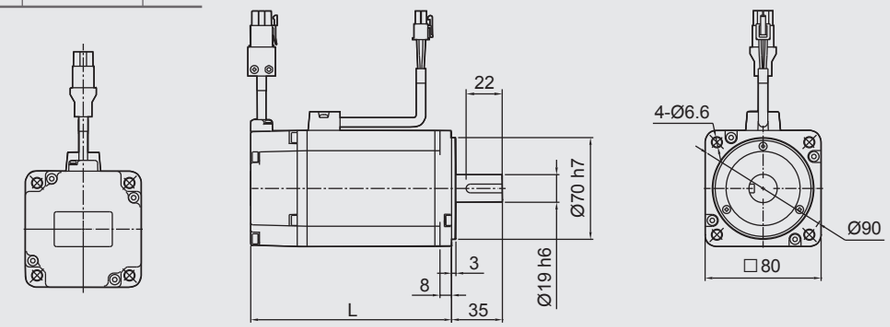

## Tamagawa

| Model Number | TS3617N3E8 | TS3653N1E2 |
|---|---|---|
| Motor Driver | CD-2D34M | |
| Frame Size (mm) | 42 | 57 |
| Rotor Inertia ($X10^{-7}kg·m^2$) | 68 | 120 |
| Rated Voltage (V) | 4 | 2.8 |
| Rated Current (A/Phase) | 1.2 | 2 |
| Step Angle | 1.8° | |
| Power Supply | DC24V | |
| Excitation Modes | Micro Step | |
| Weight(kg) | 0.3 | 0.45 |

Model
42M-TS3617N3E8

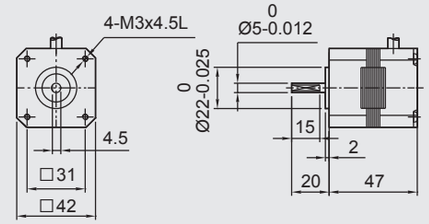


Model
57M-TS3653N1E2

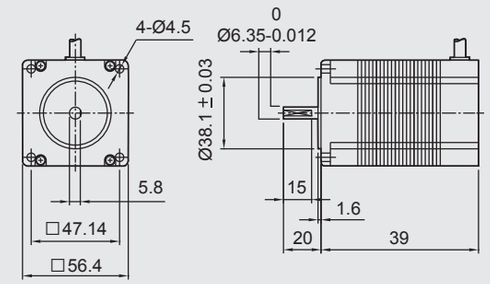


## Oreintal Motor

| Model Number | PK245-01A | PK264-02A |
|---|---|---|
| Motor Driver | UDK2112 | CMD2120P |
| Frame Size (mm) | 42 | 57 |
| Rotor Inertia ($X10^{-7}kg·m^2$) | 68 | 120 |
| Rated Current (A/Phase) | 1.2 | 2 |
| Step Angle | 1.8° | |
| Power Supply | Single-phase 100V | DC24V |
| Excitation Modesr | Micro Step | |
| Weight (kg) | 0.35 | 0.45 |

Model
42M-PK245-01A

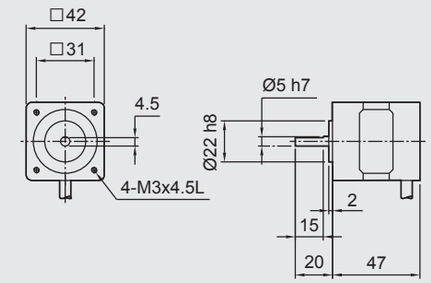


Model
57M-PK264-02A

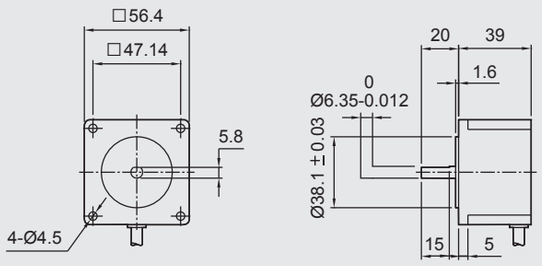


## Sanyo Denki

| Model Number | 103H5209-0440 | 103H7121-0140 |
|---|---|---|
| Motor Driver | US1D200P10 | |
| Frame Size (mm) | 42 | 57 |
| Rotor Inertia (J : $kg.m^2$) | 62 | 100 |
| Rated Current (A) | 1.2 | 1 |
| Step Angle | 1.8° | |
| Power Supply | DC24V | |
| Excitation Modes | Micro Step | |
| Weight (kg) | 0.31 | 0.47 |

Model
42M-103H5209-0440

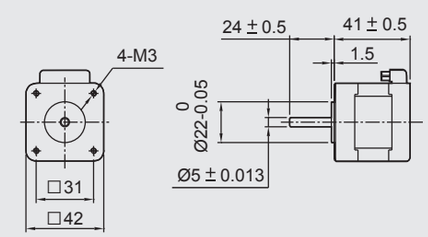


Model
57M-103H7121-0140

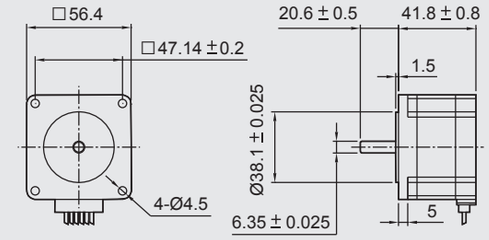

## Applicable Industry : PCB / CD / DVD

### ■ Spray-Printing Device for PCB

- Fix the PCB on the linear drive, the Uniform motion of linear drive will start the process of spray print on PCB.

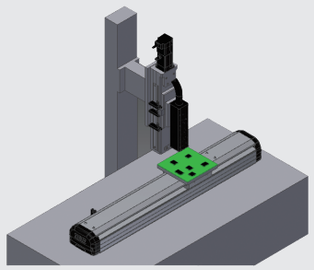

- Suggested model：
  GETH12 / GETH14

### ■ Surface Cleaning Device for PCB

- Fix the plasma on the linear drive, and moving circulate on the conveyor to clean the surface of Circuit board.

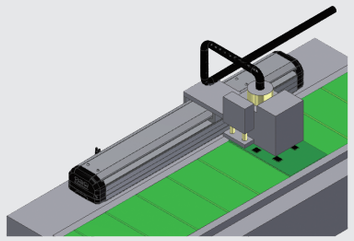

- Suggested model：
  GETH12 / GETH14

### ■ Cutting Device for PCB

- Fix the PCB on the linear drive to do the cutting process with cutter.

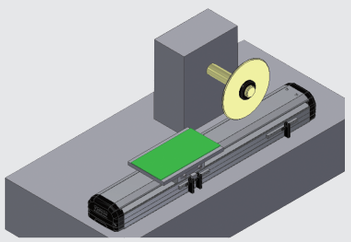

- Suggested model：
  GETH 12 / GETH14 / GETH17

### ■ Compact Disc Receiving Device

- Use the Multilateration of linear drive to do the X-Z axis movement for the position receipts.

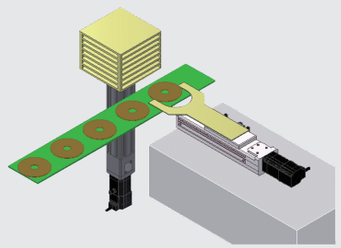

- Suggested model：
  GETH 6M / GETH12 / GETH14



GMT GLOBAL INC.
Motorized X-Axis ▶ Ball Screw&Belt Driven ▶ Linear Drive
Applications Examples Single Axis
Reference

## Applicable Industry : Semi-conductor / Packaging / Testing

### ■ IC Printer Device

- Fix the IC device on the linear drive, the Uniform motion of linear drive will start the process of laser printing.

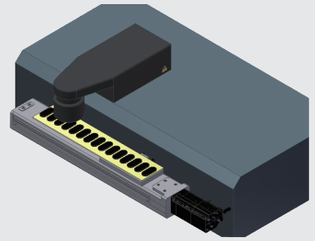

- Suggested model：
  GETH 6M / GETH10

### ■ Pick and Place Devices of IC

- Fix the IC device on the linear drive, the Uniform motion of linear drive will start the process of laser printing.

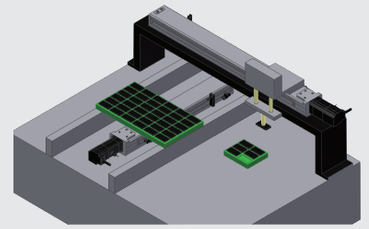

- Suggested model：
  GETH 6M / GETH10 / GETH14

### ■ Barcode Scanning Device

- Fix the XY slide on mini storage to scan the barcodes of items.

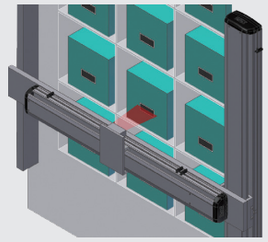

- Suggested model：
  GETH 14 / GETH17 / GETH22

### ■ Fillings Device

- Fit the different filling process of products, the programmable of linear drive could fit the different height to do the filling process.

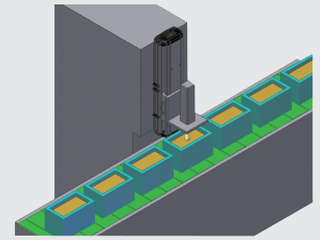

- Suggested model：
  GETH 6M / GETH12 / GETH14

## Applicable Industry : Automotive / Component Processing / Assembling / Surface Treatment Process / Mobile Phones Device

### ■ Tire Surface Check Machine

- Install the CCD on the linear drive, the Uniform motion of linear drive will check the defects on the surfect of tires and report to prodution staff.

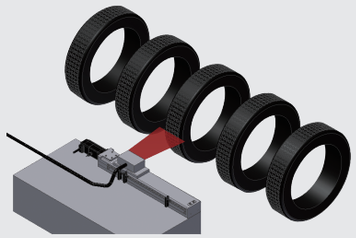

- Suggested model：
  GETH 6M / GETH10 / GETH12

### ■ Mobile Device for Surface Treatment Process

- The high speed movement of 4 axis will hang the items on linear drive into the chemical solvents to process the surface treatment.

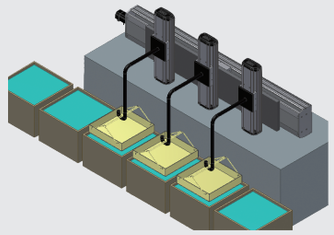

- Suggested model：
  GETH 14 / GETH17 / GETH22

### ■ Assembling Device on Disc Machine

- Use two single-axis to assemble as XY axis to install on the disc machine for components assembling.

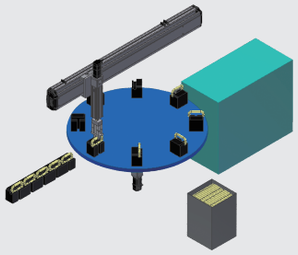

- Suggested model：
  GETH 12 / GETH14

### ■ Assembling Device for Small Components

- The multilateration of linear drive could drive the sucker to do the assembling of small components.

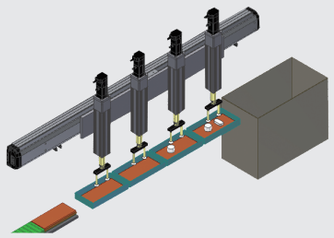

- Suggested model：
  GETH 6M / GETH10 / GETH12



GMT GLOBAL INC.
Motorized X-Axis ▶ Ball Screw&Belt Driven ▶ Linear Drive
Applications Examples Single Axis
Reference

## Applicable Industry : Manufacture Machining / Food / Raw Material

### ■ Conveyance Device for Assembly Lines

- The X-Y Axis of single linear drive could performs moving the items on conveyance.

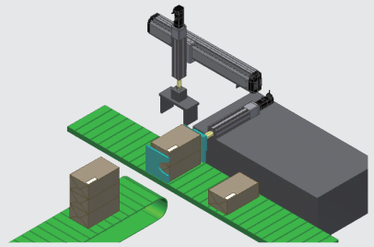

- Suggested model：
  GETH 12 / GETH14 / GETH17

### ■ Separator Device for Assembly Lines

- The production on conveyance could use the linear drive to products sorting.

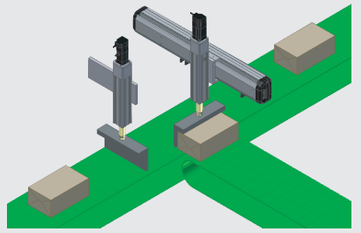

- Suggested model：
  GETH 12 / GETH14

### ■ Aligning Device for Packaging

- The linear drive with servo motor could feed the different size of parcel and speed up the process.

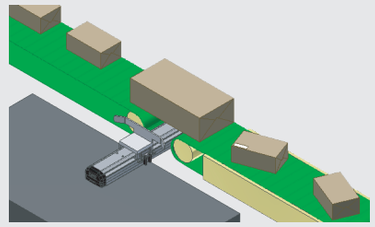

- Suggested model：
  GETH 12 / GETH14 / GETH17

### ■ Leveling Mechanism for Solvent Surfaces

- The Uniform motion of linear drive will leveling the surface of thicker Solvent.

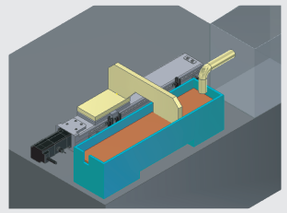

- Suggested model：
  GETH 6M

## Applicable Industry : PCB Circuit Boards

### ■ Conveyance Device for Circuit Boards

- Use two single-axis linear drive to assemble as XY axis to process the automatic carry.

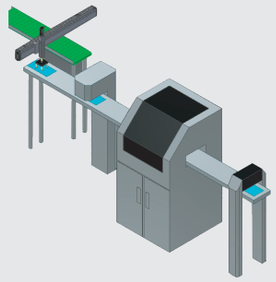

- Suggested model：
  GETH14 (X-Axis) / GETH12 (Z-Axis)

### ■ Auto-Soldering Device

- Fix the soldering device onto the XYZ axis linear drive to do the PCB solder process.

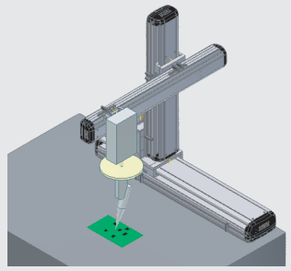

- Suggested model：
  GETH14 (X-Axis) / GETH12 (Y-Axis) / GETH14 (Z-Axis)

### ■ Piling Device for Circuit Boards

- The XYZ axis linear drive could use on the application receiving mechanism of PCB production.

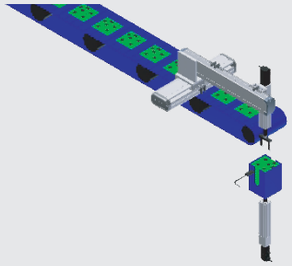

- Suggested model：
  GETH14 (X-Axis) / GETH12 (Y-Axis) / GETH6M (Z-Axis)

### ■ Visual Checking Device for CCD

- Fixes the visual system onto the X-Y-Z axes and performs AOI checks on the appearance of PCB boards.

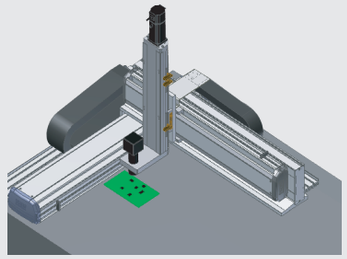

- Suggested model：
  GETH14 (X-Axis) / GETH12 (Y-Axis) / GETH6M (Z-Axis)





## Applicable Industry : CD / DVD / Mobile Devices

### ■ Piling Device for Compact Discs

- The XYZ axis linear drive could use on the application receiving mechanism of CD production.

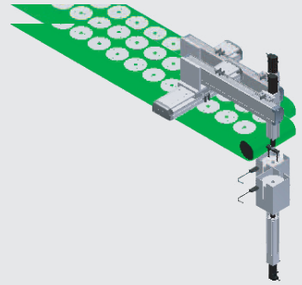

- Suggested model：
  GETH14 (X-Axis) / GETH10 (Y-Axis) / GETH6M (Z-Axis)

### ■ Ultra-Violet Exposure Device for Compact Discs

- The XY axis linear drive could use on the UV exposure devices of CDs.

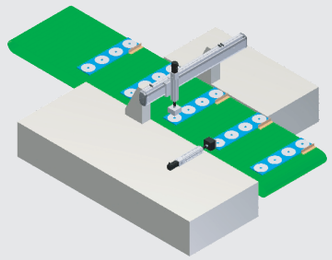

- Suggested model：
  GETH12(X-Axis) / GETH6M (Z-Axis)

### ■ Screw-tightening Device

- Utilizes the X-Y-axis mechanism for pick-and-place of screws.

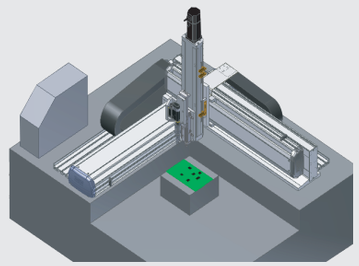

- Suggested model：
  GETH12 (X-Axis) / GETH6M (Y-Axis)

### ■ Pick-and-Place Device for Small Components

- Use the XYZ axis of linear drive on application of pick and place devices for small components.

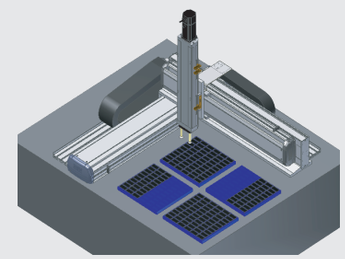

- Suggested model：
  GETH14 (X-Axis) / GETH12 (Y-Axis) / GETH6M (Z-Axis)

## Applicable Industry : LCD

### ■ Large LCD Glass Gluing Apparatus

- 2 co-action X axis with Y and Z to assemble the application of glue spray coating machine of LCD glass.

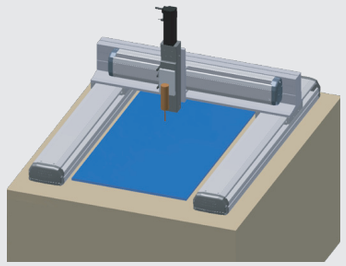

- Suggested model：
  GETH14*2 (X-Axis) / GETH12 (Y-Axis) / GETH6M (Z-Axis)

### ■ Glass Cutting

- 2 co-action X axis with Y to assemble the application of glass cutting machine.

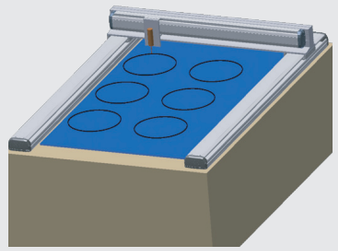

- Suggested model：
  GETH17*2(X-Axis) / GETH14(Y-Axis)

### ■ Individual Small Parts Applying Apparatus

- XYZ axis of linear drive could be used on glue spreading.
  The cost is less than the plastic machinery and it can apply in glue spreading of the production line.

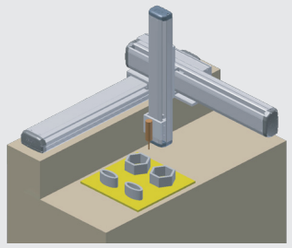

- Suggested model：
  GETH14,17 (X-Axis) / GETH12,14 (Y-Axis) / GETH6M,10 (Z-Axis)

### ■ Spray Coating Operation Apparatus

- Use XYZ axis for the cleaning or spray coating process.

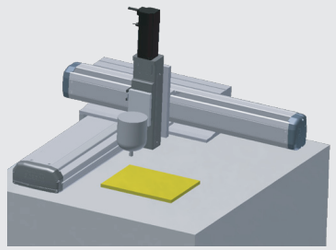

- Suggested model：
  GETH14,17 (X-Axis) / GETH12,14 (Y-Axis) / GETH6M,10 (Z-Axis)



GMT GLOBAL INC.
Motorized X-Axis ▶ Ball Screw&Belt Driven ▶ Linear Drive
Applications Examples Multi Axis
Reference

## Applicable Industry : Mechnical Production / Solar Energy / Food

### ■ Tooling Machine with Pick-and-Place Apparatus

- XYZ axis could be assembled on 2 or 3 CNC machines for pick and place multi-process.

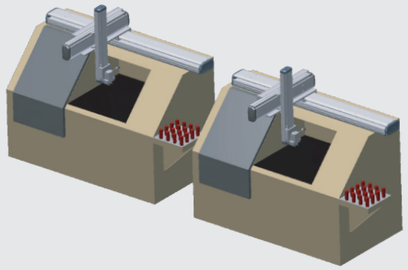

- Suggested model：
  GETH22(X-Axis) / GETH17(Y-Axis) / GETH14(Z-Axis)

### ■ Tooling Machine with Pick-and-Place Apparatus

- XYZ axis could be assembled on CNC machines for pick and place multi process and the cost will be less than six axis robotic.

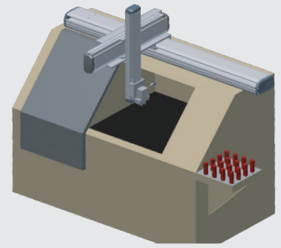

- Suggested model：
  GETH22(X-Axis) / GETH17(Y-Axis) / GETH14(Z-Axis)

### ■ Large Item Transport Device

- 2 co-action X axis with Y to assemble the large transportation device.

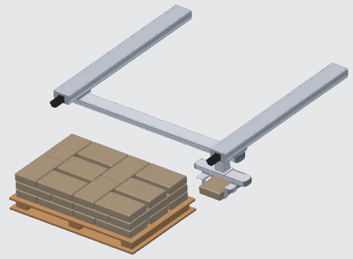

- Suggested model：
  GETH22*2 (X-Axis) / GETH17 (Y-Axis)

### ■ Glue Spreading Apparatus

- Utilizes X-Y-Z axes to assemble a antilever glue spreading mechanism for glue spreading process.

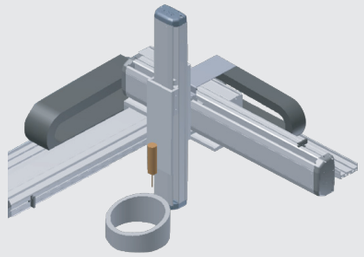

- Suggested model：
  GETH14,17 (X-Axis) / GETH12,14 (Y-Axis), GETH6M,10 (Z-Axis)

## Single-axis Actuator Inquiry Form

| Customer Name | | Date | | Recorder | |
|---|---|---|---|---|---|
| Request | Stroke : _____ mm<br>Speed : _____ mm/s<br>Load : _____ kg<br>Repeatability Accuracy : ☐±0.1 ☐±0.05 ☐±0.02 ☐±0.01 | | | | |
| Allowable Capacity (mm) | 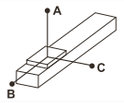 | 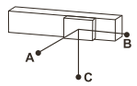 | 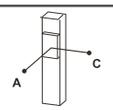 | | |
| | A: B: C: | A: B: C: | A: C: | | |
| Motor Brand | | Model No. | | | |
| Motor Mounting Options | ☐ M 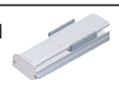 ☐ BC 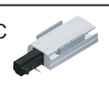 ☐ BR 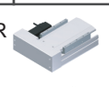 ☐ BL  ☐ BM <br>☐ L 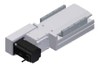 ☐ LU  ☐ LD <br>☐ R 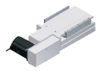 ☐ RU 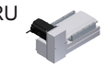 ☐ RD  | | | | |
| Sensor Options | ☐ Internal ☐ External | | | | |
| Application | ☐ Pick and Place<br>☐ CCD Test ☐ Position Test<br>☐ Moving Test<br>☐ Processing Machinery<br>☐ Screw Fastening<br>☐ Dispenser<br>☐ Other | | Graph | | |
| Environmental Conditions | ☐ Clean Room | Class 10 | Class 100 | Class 1000 | Remarks |
| | ☐ General Environment | | | | |
| Sound Level : | ☐ Without Request ☐ 70~80 Decibels ☐ 60~70 Decibels | | | | |
| Ball Screw Brand : | ☐ Standard Type (M.I.T) | Request Brand (Quote on request) | | | |
| Request Purpose : | ☐ Mass Production ☐ Trial Run | | | | |
| Remarks : | | | | | |

* Please complete this form and return it to us at your earliest convenience. Our sales will provide a prompt service after receiving your request.





## Multi-axis Actuator Inquiry Form

| Customer Name | | Date | | Recorder | |
|---|---|---|---|---|---|
| Request | Stroke : X _____ Y _____ Z _____<br>Speed : X _____ Y _____ Z _____<br>Load : _____ kg<br>Repeatability Accuracy : ☐±0.1 ☐±0.05 ☐±0.02 ☐±0.01 | | | | |
| Allowable Capacity (mm) | 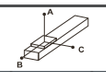 |  |  | | |
| | A: B: C: | A: B: C: | A: C: | | |
| Combination Types | A Type  ☐ A1  ☐ A2  ☐ A3  ☐ A4  | | | | |
| | G Type  ☐ G1  ☐ G2  ☐ G3  ☐ G4  | | | | |
| | P Type  ☐ P1  ☐ P2  | | | | |
| | F Type  ☐ F1  ☐ F2  | | | | |
| Motor Brand | | Model No. | | | |
| Motor Mounting Options | X Axis ☐ M  ☐ BC  ☐ BR  ☐ BL  ☐ BM <br>☐ L  ☐ LU  ☐ LD <br>☐ R  ☐ RU  ☐ RD  | | | | |
| | Y Axis ☐ M  ☐ BC  ☐ BR  ☐ BL  ☐ BM <br>☐ L  ☐ LU  ☐ LD <br>☐ R  ☐ RU  ☐ RD  | | | | |
| | Z Axis ☐ M  ☐ BC  ☐ BR  ☐ BL  ☐ BM  | | | | |
| Sensor Options | ☐ Internal ☐ External | | | | |
| Application | ☐ Pick&Place ☐ Position Test ☐ Processing Machinery<br>☐ Screw Fastening<br>☐ C C D Test ☐ Moving Test ☐ Dispenser | | | | |
| Auxiliary shaft is strongly suggested as long as the stroke of Y axis is over 350 mm. | | | | | |
| Environmental Conditions | ☐ Dusty Environment<br>☐ General Environment | ☐ Clean Room | Class 10 | Class 100 | Class 1000 |
| Sound Level : | ☐ Without Request ☐ 70~80 Decibels ☐ 60~70 Decibels | | | | |
| Ball Screw Brand : | ☐ Standard Type (M.I.T) | Request Brand (Quote on request) | | | |
| Request Purpose : | ☐ Mass Production ☐ Trial Run | | | | |
| Remarks : | | | | | |

* Please complete this form and return it to us at your earliest convenience. Our sales will provide a prompt service after receiving your request.