Options

Cable

JCN-S(2m)
JCN-5S(5m)
JCN-10S(10m)

JCN-L(2m)
JCN-5L(5m)
JCN-10L(10m)

Bracket

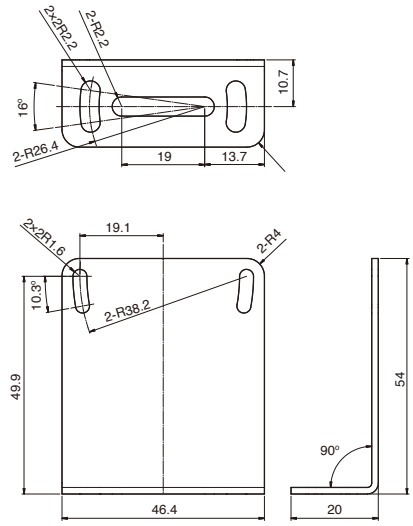

BEF-OD1-A
(for connector type)

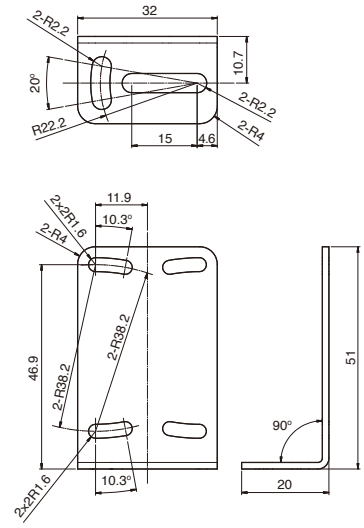

BEF-OD1-B
(for cable type)

Specifications

Part number	Cable type	Aluminum housing	BGS-HL05T	BGS-HL25T	BGS-HL25T2
		SUS housing	BGS-HLM05T	BGS-HLM25T	BGS-HLM25T2
	Connector type	Aluminum housing	BGS-HL05TC	BGS-HL25TC	BGS-HL25TC2
		SUS housing	BGS-HLM05TC	BGS-HLM25TC	BGS-HLM25TC2
Sensing distance			20 50mm	50 250mm	
Repeatability			0.01mm	0.1mm	
Minimum detectable height difference			0.08mm	0.8mm	
Light source			Red laser Diode (wave length 655nm)		
			0DBWSWB:		0DBWSWB:
Laser class		IEC/JIS	Class 1		Class 2
		FDA	Class		
Spot size			nBP	nBP	
Response time			default: 1.5 7ms	default: 3~14ms	
Hysteresis			0 22.49mm (default:0.15mm)	0~149.9mm (default:1mm)	
Indicator			Laser indicator: Green / Output indicator: Orange / Mode indicator: Red		
Digital display			7 segment 4 digit LED display		
Adjusting sensing distance			Teaching / Manual		
External Input			Laser OFF, Teaching, Sample & Hold, One shot		
Control Output			NPN/PNP max.100mA/DC24V (Residual voltage 1.8 V max.)		
Operating mode			Light ON/Dark ON selectable by setting		
Timer			OFF/On delay/Off delay/One shot (0~9999ms)		
Power supply / Current consumption			DC12 24V including 10% ripple (p-p) / 40mA max.		
Protection circuit			Reverse connection protection, Over current protection		
Protection category			IP67		
Operating Temp. / Humid.			-10 a6WRWUHHLBUERGHVDWLR		
Storage Temp. / Humid.			-20 a		
Ambient illuminance			Incandescent lamp: 5,000 lx max.		
Vibration resistance			10 BEOHDPSOLWGHBPRUBUV		
Shock resistance			500mm/s² DSSURWLPHVBDF		
Material			Case: Alminum type Aluminum / SUS type SUS, Front lens: PPSU, Display: PET		
Weight			Cable type: Approx. 90g, Connector type: 30g		
Bundled option			Mounting bracket: BEF-OD1-B (for cable type) / BEF-OD1-A (for connector type), M3 screw * 2pieces		

RVSHFLILFDWLRQDUHEDVHGRQKFRQLWLRQHVVRWKUZVHGHVLJQWHGPELHQWHPSHUDWXHKSOROWDJHPSOLQSHULRGeVUDJLQ
Measuring distance: Center of the range, Testing object: White ceramic

VSODVRVa*6a*6
When "shift function" is ON, display shows 0 at the teaching position.
The display is available to show number in the range as follows.
-7.50~37.5 (BGS-HL05**), -50.0~250.0 (BGS-HL25**)
DPSOLSHULRGV
WHUHVLVWHWWL*6*6
ILHGWHWHUWUHWH WWHHWHUHHDHOHDNOLWHUWDWHWSHFLILHGWSRWLH
The sensor may be affected when there is a highly reflective object close to the detection area.